User Manual

GF1-3.6~6KS2 Inverter

v1.2 2025-10

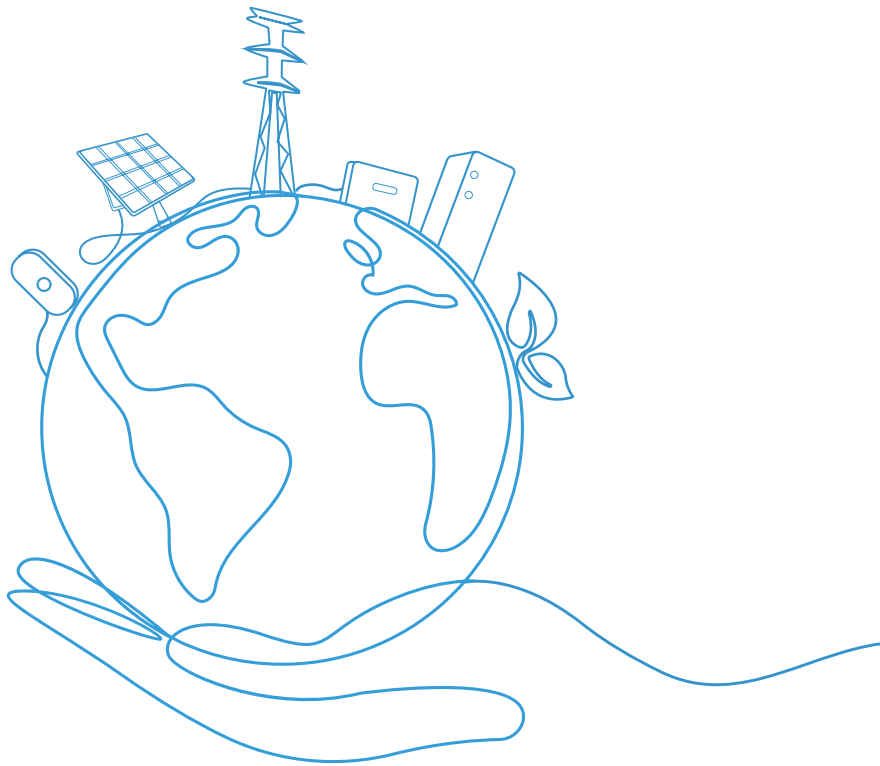

LIVOLTEK

Legal Provisions

Copyright © Hangzhou Livoltek Power Co., Ltd. 2025 All rights reserved.

The information contained in these documents is the property of Hangzhou Livoltek Power Co., Ltd. No part of this document may be reproduced, stored in a retrieval system, or transmitted, in any form or by any means, be it electronic, mechanical, photographic, magnetic or otherwise, without the prior written permission of Hangzhou Livoltek Power Co., Ltd. Internal reproduction used solely for the purpose of product evaluation or other proper use is allowed and does not require prior approval.

Warranty

You can download the current warranty conditions from the internet at https://www.livoltek.com/warranty-center/.

Trademarks

LIVOLTEK and other Livoltek trademarks are trademarks of Hangzhou Livoltek Power Co., Ltd. All other trademarks and trade names mentioned in this document are the property of their respective holders.

Notice

Hangzhou Livoltek Power Co., Ltd. makes no representations or warranties, express or implied, with respect to this documentation or any of the equipment and/or software it may describe, including (with no limitation) any implied warranties of utility, merchantability, or fitness for any particular purpose. All such representations or warranties are expressly disclaimed. Neither Hangzhou Livoltek Power Co., Ltd. nor its distributors or dealers shall be liable for any indirect, incidental, or consequential damages under any circumstances.

The exclusion of implied warranties may not apply in all cases under some statutes, and thus the above exclusion may not apply.

Specifications are subject to change without notice. Every attempt has been made to make this document complete, accurate and up-to-date. Readers are cautioned, however, that product improvements and field usage experience may cause Hangzhou Livoltek Power Co., Ltd. to make changes to these specifications without advance notice or per contract provisions. Hangzhou Livoltek Power Co., Ltd. shall not be responsible for any damages, including indirect, incidental or consequential damages, caused by reliance on the material presented, including, but not limited to, omissions, typographical errors, arithmetical errors or listing errors in the content material.

Livoltek will keep right to explain all the contents in this manual.

About this Manual

Validity

This manual is valid for the following products:

- GF1-3K6S2
- GF1-6KS2

Model Description

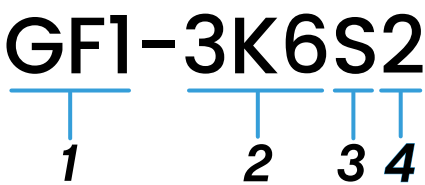

1	**Product Name**	GF1: single-phase off-grid inverter
2	**Power**	3K6: rated power of the inverter is 3.6kW
3	**Rated grid voltage**	S: rated grid voltage is 220/230/240V
4	**Version**	2: second generation of this series of inverter

Target Group

This document is intended for qualified persons and operators. Only qualified persons are allowed to perform the activities marked in this document with a warning symbol and the caption "Qualified person". Tasks that do not require any particular qualification are not marked and can also be performed by operators. Qualified persons must have the following skills:

- Have basic knowledge and installation skills of inverter.
- Training to deal with risks associated with installing, repairing, and using electrical devices, inverters, and batteries.
- Training in the installation and commissioning of electrical devices and installations.
- Knowledge of all applicable laws, regulations, standards, and directives.
- Knowledge of and compliance with this document and all safety information.
- Successful participation in a training course on commissioning the inverter with the Livoltek manufacturer.

Levels of Warning Messages

The following levels of warning messages may occur when handling the product.



DANGER

Indicates risk of Electric Shock which will result in death or serious injury if not avoided.



WARNING

Indicates a situation of moderate potential hazard that could result in death or serious injury if not avoided.



CAUTION

Indicates a low level of potential hazard that, if not avoided, could result in moderate or minor injury to personnel.



NOTE

Emphasis and additions to the content may also provide tips for optimizing the use of the product.

Table of Contents

1 Safety 1
- 1.1 General Safety 1
- 1.2 Personal Safety 2
- 1.3 Mechanical Safety 3
- 1.4 Electrical Safety 3
  - 1.4.1 Inverter Safety 5
  - 1.4.2 Battery Safety 6

2 Product Overview 7
- 2.1 Application Scenarios 7
- 2.2 Appearance and Ports 9
- 2.3 Dimensions 9
- 2.4 Certification and Safety Symbols on the Inverter 10
- 2.5 Work Mode 11
  - 2.5.1 ECO Mode 11
  - 2.5.2 TOU Mode 12
  - 2.5.3 Battery First Mode 12
  - 2.5.4 Off-grid Mode 13

3 Transportation and Storage 14

4 Preparation before Installation 15
- 4.1 Installation Site Selection 15
  - 4.1.1 Environment Requirement 15
  - 4.1.2 Angle and Space Requirement 16
- 4.2 Materials Preparation 17
  - 4.2.1 Tools Preparation 17
  - 4.2.2 Additionally Required Materials 18

5 Unpacking and Inspection 19
- 5.1 Package Unpacking and Inspection 19
- 5.2 Scope of Delivery 20
- 5.3 Inverter Handling Requirement 21

6 Mechanical Installation 22

7 Electrical Connection 26

7.1 Electrical Connection Diagram 27
7.2 Overview of Inverter Connection Area 28
7.3 PE Connection 29
7.4 GRID and EPS Connection 32
7.5 PV Connection 35
7.6 Battery Connection (BAT&BMS) 39
7.7 GEN Connection 42
7.8 Function Port Connection (MULTI & METER) 45
7.8.1 Function Port Introduction 45
7.8.2 Wiring procedure 46
7.8.3 Parallel Connection (MULTI) 47
7.9 Stick Logger Connection 49
7.10 Installation and Electrical Connection Verification 49

8 System Operation 50
8.1 Inverter LCD Display 50
8.2 Start-up Procedure 51

9 Setting 53
9.1 Setting on the Inverter Display 53
9.1.1 Setting Menu 53
9.1.2 Setting Items on the Display 54
9.2 APP Setting 62

10 Troubleshooting and Maintenance 63
10.1 Troubleshooting 63
10.2 Routine Maintenance 68
10.2.1 Safety Precautions 68
10.2.2 Shutdown the Inverter 69
10.2.3 Equipment Maintenance 69

11 Decommissioning 70
11.1 Disassembling the Device 70
11.1.1 Shut Down the Inverter 70
11.1.2 Dismantling the inverter 70
11.2 Packing 71
11.3 Disposing of the Device 71

12 Technical Specifications 72

1 Safety

1.1 General Safety

Before transporting, storing, installing, operating, using, and/or maintaining the equipment, please read this manual carefully, strictly follow the instructions, and comply with all safety precautions indicated on the device and in the manual.

The safety alerts in this manual - **DANGER**, **WARNING**, **CAUTION** and **NOTE** - are not exhaustive. Installers must also comply with all applicable international, national and regional regulations, as well as industry best practices. Livoltek shall not be liable for any consequences resulting from violation of safety operation requirements, non-compliance with safety standards in equipment design, manufacture or use, equipment failures or malfunctions caused by use outside specified environmental conditions and any personal injuries, property damage or other losses arising from improper use.

The equipment must only be used in environments that meet all design specifications. Any malfunctions, performance issues or component damage resulting from non-compliant usage will not be covered under the product warranty.

Transportation, storage, installation, operation, use and maintenance must strictly follow applicable laws, regulations, standards and specifications.

Any of the following actions are strictly prohibited:

- Reverse engineering, decompiling or disassembling the device software.
- Modifying, adapting or other operations on the software.
- Attempting to analyze the device's internal logic or obtain source code.
- Disclosing any software performance test results.
- Any other actions that may infringe intellectual property rights.
- Obtain communication protocols from illegal channels.
- Build monitoring, control system without authority from Livoltek.

Livoltek shall not be liable for any of the following circumstances or their consequences:

- Force Majeure Events

  Earthquake, flood, volcanic eruption, landslide, lightning strike, fire, war, armed conflict, typhoon, hurricane, tornado, extreme weather and other force majeure events.

- Improper Usage

  Operating the device under conditions not described in this manual.

  Non-compliant installation/usage environments that violate related international, national, or regional standards.

  Installing, refitting, operating the deviicee in improper ways, under improper environment or electrical connection menntioned in this user manual without authority from Livoltek.

Failure to follow instructions and safety warnings in the manual.

Unauthorized disassembly, hardware modification, or software code alteration.

- Third-Party Causes

Damage caused during transportation by you or your authorized third parties.

Storage conditions not meeting the product requirements.

Use of materials/tools that fail to comply with local laws and standards.

- Human Factors

Damage resulting from negligence, intentional acts, misconduct, improper operation by you or third parties.

Installation or operation by unqualified personnel.

1.2 Personal Safety



DANGER

- Live work is strictly prohibited during installation.
- Never install or remove cables while equipment is energized.
- Improper or incorrect operations may result in fire hazards, electric shock risks or potential explosions and thus cause serious personal injury or fatality and significant property damage.
- Before any operation, installers must wear insulated protective equipment to ensure personal safety.
- During operation, installers must use specialized insulated tools that comply with related local laws, regulations, standards, and technical codes.



WARNING

- Do not disable any protective devices of the equipment. And never ignore warnings, cautions, or preventive measures stated in the manual or labeled on the inverter.
- If any malfunction is detected that may cause personal injuries or equipment damage during operation, stop operation immediately and implement approved protective measures.
- Do not energize the equipment if installation is incomplete or the equipment is not verified by qualified personnel.
- The installation site of the equipment should be away from children.

1.3 Mechanical Safety

CAUTION

- Check whether the inverter and its accessories are damaged as soon as receiving the inverter. If yes, contact your dealer immediately.
- The inverter must be installed in a place with adequate ventilation. Mount the inverter in vertical direction, and ensure that no objects block the heat dissipation.
- The safety instructions in this manual cannot cover all the precautions that should be followed.
- LIVOLTEK shall not be held liable for any damage caused by violation of the safety instructions in this manual.

1.4 Electrical Safety

DANGER

- During operation, prevent foreign objects from entering the equipment. Failure to do so may result in equipment damage (short circuit or mechanical failure), power abnormalities (load power reduction or outage) and personal injury hazards.
- Improper or incorrect operation may cause fire, electric shock, or other accidents.
- Before connecting or disassembling power cables, power off the device and the breakers between the inverter and other power supply devices.
- Before connecting assembled power cables, ensure that the labels on the cables are correct and terminals assembled on the cables are well insulated.
- The equipment must be kept away from flammable/explosive materials, heat sources, and open flames and avoid exposure to direct sunlight, dust accumulation, volatile/corrosive gases, radioactive substances, organic solvents and high-salt environments.
- Ensure that the equipment is placed in an environment with an ambient temperature, no direct sunlight exposure, clean, dry, and well-ventilated conditions.
- Check and confirm that the positive and negative polarity of PV strings are correctly connected to the corresponding positive and negative terminals of the inverter.
- During the installation and electrical connection process, ensure that the positive and negative poles of PV strings do not short-circuit to the ground. Otherwise, an AC/ DC short-circuit may occur, thus resulting in equipment damage. The damage caused by this is not covered by the waranty.

DANGER

- Check and confirm that input terminals of PV strings are connected to the PV input terminals of the inverter and do not connect to any other DC source to the PV input terminal to the inverter.
- Before connecting PV arrays, ensure that their voltage is within a safe range.
- Before touching DC cables, use measuring devices to ensure that the cable is voltage-free and current-free.
- The installers and operators must follow all warnings on the PV strings and in its manual.
- Comply with the safety instructions related to PV strings and the regulations related to the local grid.

WARNING

- For grounded equipment: during installation, the protective grounding cable must be connected first. And during removal, the protective grounding cable must be disconnected last.
- The sequence of installation, operation and maintenance should be operated in accordance with the manual.
- The equipment grounding impedance shall comply with applicable local electrical standards.
- The equipment shall be permanently connected to the protective earth (PE).
- Before operating the equipment, verify that all electrical connections and ensure reliable grounding is established.

CAUTION

- Cable selection, routing, and connection must strictly comply with local laws, regulations, and technical codes.
- All cables must be securely connected, with intact insulation and proper specifications.
- Cable trays and conduit entry points shall be free of sharp edges. All penetration points (e.g., knockouts, bushings) must have protective fittings installed.
- Implement safeguards to prevent cable damage from burrs, abrasive surfaces and other mechanical hazards.

1.4.1 Inverter Safety

DANGER

Danger: Fatal electric shock hazard if opened. Live components inside.

- High voltages are present in the live parts and cables inside the product during operation. Touching live parts and cables results in death or lethal injuries due to electric shock.
- Do not open the inverter cover or change any components without manufacturer's authorization. Otherwise, the warranty for the inverter will be invalid.

WARNING

Danger to life due to fire or explosion.

- In rare cases, an explosive gas mixture can be generated inside the product under fault conditions. In this state, switching operations can cause a fire inside the product. Death or lethal injuries due to hot or flying debris can occur.
- In the event of a fault, do not perform any direct operations on the product.
- Ensure that unauthorized personnel have no access to the product.
- Only perform operation on the product when you wear personal protective equipment for handling of hazardous substances.
- Wait at least 5 minutes for the internal capacitors to discharge after the battery, the PV and the grid are powered off.

CAUTION

Danger to life due to fire or explosion.

- Do not touch any hot parts (such as the heat sink) during operation.

1.4.2 Battery Safety



DANGER

Danger to life due to live DC cables of the battery.

- The DC cables connected to a battery may be live. Touching the DC conductors or the live components leads to lethal electric shock.
- Do not touch non-insulated cable ends.
- Do not touch any live components.
- Observe all safety information from the battery manufacturer.
- Prior to performing any work on the inverter or the battery, disconnect the inverter from power as described in this document.
- If an error occurs, have it rectified by qualified personnel only.



WARNING

Risk of burns due to electric arcs.

- Short-circuit currents in the battery can cause heat build-up and electric arcs.
- Disconnect the battery from power prior to performing any operation on the battery.

2 Product Overview

The inverter is a single-phase off-grid inverter which can convert the DC power from the PV array or the battery to the AC power, in conformity with the grid requirements. It also transmits the DC power from the PV panel to the battery. With the bidirectional converter integrated inside, the inverter can charge or discharge the battery.

2.1 Application Scenarios

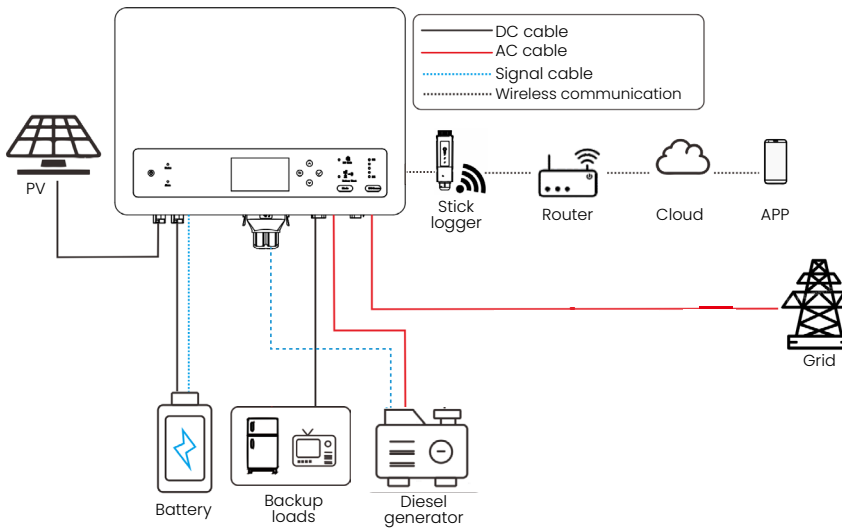

Figure 2-1 Application scenario (diesel generator)

NOTE

- The number of PV modules in the figure above are taken for example.
- The GEN port is connected with either a generator or smart loads. In this application scenario, a generator is connected to the GEN port for an example.

Table 2-1 Devices in the system

Device Type	Description
Inverter	GF1 series energy storage inverter supports a grid connection of a photovoltaic system. This inverter does not support grid feed-in.
PV module	PV string is composed of multiple PV modules in series.
Battery	This series inverter should be coupled with low-voltage batteries. One pair of battery terminals can be connected with one string of battery. It communicates with the inverter via BMS terminal in the COM port.
Backup loads	Emergency and critical loads requiring uninterruptible power supply, are connected to the EPS port of the inverter.
Smart loads	Smart loads with low-frequency of use are connected to the GEN port. When there is grid input, smart loads are powered by the grid. When there is grid outage, smart loads are automatically turned on or turned off via the **EPS Secure** value on the inverter LCD or via the **ON** or **OFF** SoC on **My Livoltek** APP. When the actual battery SoC is lower than the **EPS Secure** value or the **OFF** SoC, smart loads are automatically turned off.
Diesel generator	A diesel generator is connected to the GEN port of the inverter.

2.2 Appearance and Ports

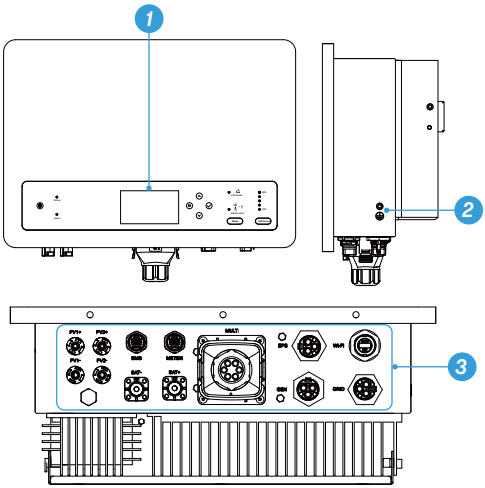

Figure 2-1 Appearance and ports

Table 2-2 Introduction to inverter ports

No.	Item	Description
1	LCD display	Includes the display, indicators and keys.
2	Grounding terminal	Connect the housing of an inverter to the earth.
3	Electrical connection area	Includes PV terminals, battery terminal, EPS and GRID terminals, communication terminals and etc.

2.3 Dimensions

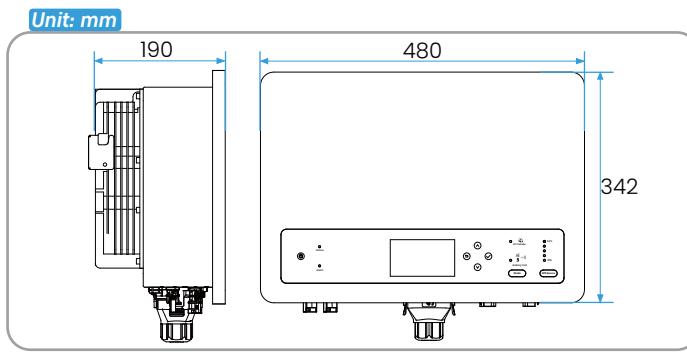

Figure 2-2 Inverter dimensions

2.4 Certification and Safety Symbols on the Inverter

NOTE

- Certification is subject to the actual product.

Table 2-3 Symbols on the inverter

Symbol	Description
	CE Mark: The inverter complies with the requiremnets of the applicable CE guideline.
	RCM mark of conformity.
	The inverter complies with the requirements of the applicable UKCA guideline.
	The inverter complies with the requirements of the applicable UKNI guideline.
	The inverter complies with the requirements of the applicable INMETRO guideline. The INMETRO certification is one of the key market access credentials for entering the Brazilian market.
	Caution: risk of electric shock
	Caution: risk of danger
	Caution: hot surface
	RoHS mark
	Danger to life due to high voltage. Disconnect all power supplies before performing any operations on the inverter.
	Refer to the corresponding instructions.
	WEEE Mark: Do not dispose of the inverter together with household waste.

2.5 Work Mode

This series inverter supports four work modes: **ECO Mode** (Self-use), **TOU** (Self-define), **Battery First** (Backup) and **Off-grid** mode. You can select and configure the first three work modes via **My Livoltek** APP. The inverter shall automatically switch to **Off-grid** mode during grid outage.

2.5.1 ECO Mode

The **ECO** (self-use) mode is ideal for regions with low grid import rates and high electricity costs, maximizing solar energy consumption and minimizing grid dependency.

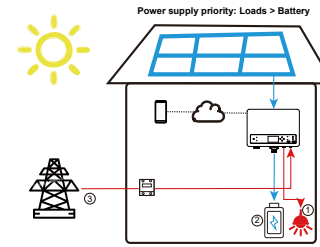

During daytime and sufficient solar power is available,

- The PV generation prioritizes powering loads first. Any surplus PV generation charges the battery.
- When the battery is fully charged, the PV generation powers loads.

During nighttime and solar power is insufficient or unavailable,

- The battery discharges to powers loads until reaching its capacity limit, with any additional power demand drawn from the grid.
- The battery shall cease discharging when its actual SoC falls below the configurable discharge cut-off threshold, at which point local loads will automatically switch to the grid for power supply.
- The system automatically and seamlessly transitions among battery, PV, and grid power sources.

When grid fails,

In case of grid failure or mains outage, the off-grid inverter automatically transitions to off-grid mode. This mode establishes a battery-backed microgrid, utilizing both PV generation and battery storage to supply power for critical loads.

NOTE

The battery power supply can be restored when the battery is charged to the “set value +10%” by PV generation.

2.5.2 TOU Mode

The **TOU** (self-define) mode is designed for regions implementing time-of-use tariffs, where electricity price fluctuates between peak and off-peak periods.

This mode enables customers to maximize solar power usage during optimal times, minimizing grid electricity usage during peak tariff hours and reduce costs.

When operating in this mode, the charging and discharging time can be set flexibly as required. This mode is ideal for those who want to charge the battery when the electricity price is at an off-peak rate and use the PV and battery power during peak rate time or save the energy for grid outages.

- During the scheduled time periods, the battery charges or discharges with preset commands. During unscheduled periods, the system shall automatically switch to **ECO** (self-use) mode.
- During charging time periods, the PV and the grid will charge the battery as first priority at the same time, any excess PV generation powers loads.
- During discharging time periods, the PV generation power loads.

NOTE

The battery power supply can be restored when the battery is charged to the "set value +10%" by PV generation.

2.5.3 Battery First Mode

The **Battery First** (Backup) mode is designed for regions with grid instability, enhancing system autonomy during outages while minimizing the frequency of battery charging and discharging to extend battery life.

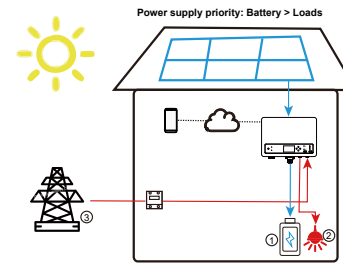

- Under this work mode, the actual battery SoC is required to be kept at a high level (default 50%) (set via APP) in case of grid outage.
- When the system is connected to the grid, the battery is only allowed to discharge power when the actual battery SoC is above the set value.
- When the actual battery SoC is lower than the set value, the battery shall never discharge and the PV and grid will charge the battery to the set value as first priority. If the PV generation is sufficient, it will fully charge the battery.
- The loads will be supplied power by the surplus PV generation, or by the grid if necessary.

NOTE

The battery power supply can be restored when the battery is charged to the "set value +10%" by PV generation.

2.5.4 Off-grid Mode

The **Off-grid** mode is suitable for non-grid areas, and the inverter will automatically activate this mode in the event of grid failure.

When the inverter works in this work mode, the PV and the battery make a pure off-grid system, the critical loads (backup loads) will be powered by PV generation. If the PV generation is insufficient, the battery will discharge power to the loads at the same time. (Batteries are necessary in this work mode.)

NOTE

- When battery is discharged to the discharge cut-off value (@EPS), the inverter will stop working and wait for the grid to recover or until there is sufficient power from the PV to charge the battery.
- If grid failure is a common occurrence in your area, it is recommended to set the discharge cut-off value (@Grid) higher to ensure that there is more battery power available during grid outage.

3 Transportation and Storage

If the inverter is not put into use immediately, the following transportation and storage requirements needs to be met.

Transportation

- Prior to transportation, all warning labels and handling instructions on the inverter packaging must be strictly observed.
- Pay attenting to the weight of inverter. Be cautious to avoid injury when carrying this series inverter. Transport it with appropriate number of personnel required by local regulations.
- Wear protective gloves when carrying the equipment by hand to prevent injuries.
- When lifting up the inverter, hold the handle position and the bottom position of the inverter. Keep the inverter horizontal in case of falling down.

Storage

- The inverter must be stored indoors.
- Do not remove the original packaging materials and check the outer packaging material regularly.
- Stack the inverter in accordance with the caution signs on the inverter carton to prevent their falling down and device damage. Do not place it upside down.
- The inverter should be stored in a clean and dry place and be protected from dust and water vapor corrosion.
- Do not store the inverter in places susceptible to direct sunlight, rain, and strong electric field.
- Do not store the inverter in places with corrosive substances or susceptible to rodents and insects. If any insect or rodent bites are found, replace the packaging materials in time.
- Carry out periodic inspections. Inspection shall be conducted at least once every six months.
- If the inverter has been stored for more than one year, inspection and testing by professionals are required before it can be put into operation.
- If the inverter needs to be transported again, pack it strictly before transporting it.

NOTE

- Please store the inverter according to the storage requirements. Product damage caused by failure to meet the storage requirements is not covered by the warranty.

4 Preparation before Installation

4.1 Installation Site Selection

4.1.1 Environment Requirement

Install the device in a well-ventilated environment to ensure good heat dissipation. In the case of poor ventilation, the system performance may compromise. Ensure the installation site meets the following conditions:

- Not in areas where highly flammable materials are stored.
- Not in potential explosive areas.
- Not in the cool air directly.
- Not near the television antenna or antenna cables.
- Not higher than the altitude of 2000m above sea level.
- Not in environment of precipitation or humidity (> 95%).
- The slope of the wall should be within ±5°.
- The wall must be solid enough to bear the weight of the inverter.
- Do not install the inverter on a wall made of gypsum boards or similar materials with weak sound insulation to avoid noise disturbance in a residential area.
- The ambient temperature in the range of -25℃ to +60℃ .
- Not in areas with direct sunlight, rain exposure, snow laying up.
- Do not install the inverter where people can easily touch its enclosure and heat sinks.
- DO NOT install the inverter in a place where personnel are likely to come into contact with its enclosure and heat sinks because these parts are extremely hot during operation.



No direct sunlight No rain exposure No snow laying up

Figure 4-3 Environment requirement

4.1.2 Angle and Space Requirement

Neither install the inverter horizontally nor install it with a forward or backward tilt or even with it upside down. The horizontal installation can result in damage to the inverter. Install the inverter upright to facilitate heat dissipation.

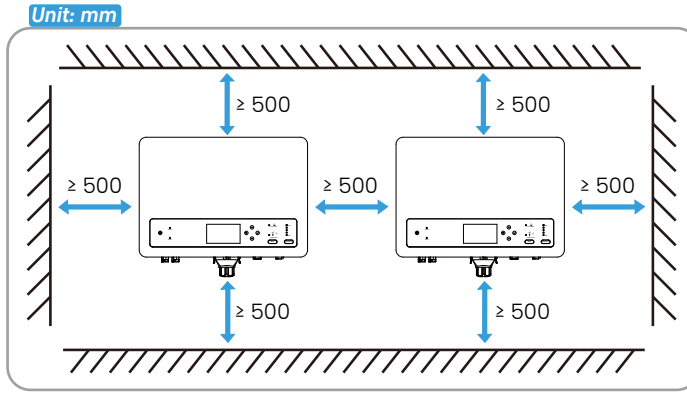

Figure 4-4 Space requirement

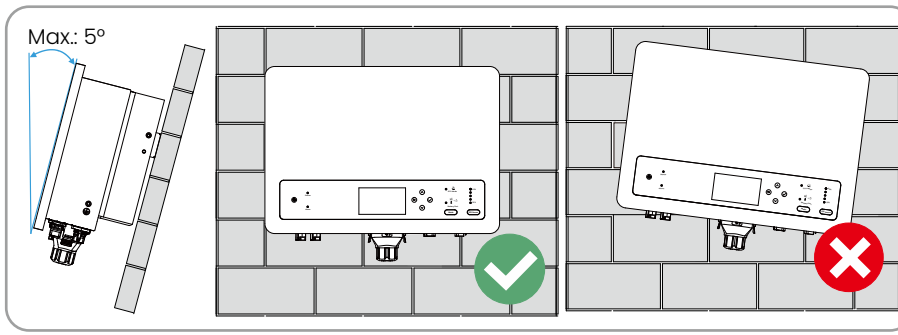

Figure 4-5 Angle requirement

4.2 Materials Preparation

4.2.1 Tools Preparation

The following tools are recommended for installation

Table 4-4 Tools preparation


Spiritual level

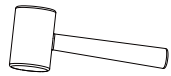
Rubber hammer


Drill

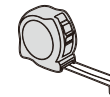
Measuring tape


Utility knife


Marker

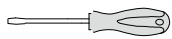
Flat screwdriver


Phillips screwdriver


Socket spanner

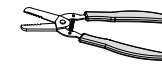
Wire stripper

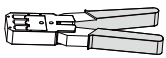
Crimping tool for RJ45 terminals

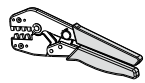
MC4 crimping tool


Hydraulic clamp

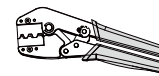
Crimping tool

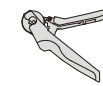
Crimping tool for pin terminals

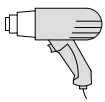
Heat gun


Heat shrink tubing

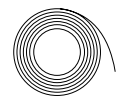
Insulating tape

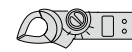
Clamp current meter


Multimeter

Zip tie


Safety gloves


Safety boots


Safety goggles


Anti-dust mask

4.2.2 Additionally Required Materials

Table 4-5 Self-prepared cables

No	Item	Recommended Specifications
1	PE cable	8 AWG/ 10 mm^2 outdoor one-core copper cable
2	GRID/ EPS cable	8 AWG/ 10 mm^2 outdoor one-core/ three-core copper cable
3	PV cable	6 AWG/ 4 mm^2 outdoor copper cable
4	Battery cable	3 AWG/ 25 mm^2 outdoor copper cable
5	Network cable	CAT5E
6	Signal cable	Shielded twisted pair cable

Table 4-6 Self-prepared circuit breakers

No.	Item	Recommended Specifications
1	Grid/EPS circuit breaker	Rated current ≥ 63A
2	DC (BAT) circuit breaker (optional)[1]	Rated current: 160A

NOTE

- Other sizes of grounding cable that meet local standards and safety regulations can be used for grounding connections. But Livoltek shall not be held liable for any damage caused.

1. For Livoltek batteries connected, install a DC breaker between the inverter and the battery if no internal breaker is inside the battery for safety.

5 Unpacking and Inspection

5.1 Package Unpacking and Inspection

Our product has been thoroughly tested and strictly inspected before delivery. Nonetheless, damage may still occur during transportation. For this reason, please conduct a thorough inspection after receiving the product.

- Check the outer package for any visible damage.
- Check the scope of delivery for completeness according to the packing list.
- Check the inner contents for damage after unpacking.

Contact Livoltek or the transport company in case of any damage or incompleteness, and provide clear photos to facilitate services.

Do not dispose of the original outer package. It is recommended to store the device in the original package when the product is decommissioned.

NOTE

- After receiving the product, check whether the appearance and structural components of the device are damaged, and check the packing list is consistent with the actual received accessories. If there are problems with above inspection items, do not install the device and contact your diatributor first. If the problem persists, contact our dealer or Livoltek after-sales team for support in time.
- If any tool is used for unpacking, be careful not to damage the product.

5.2 Scope of Delivery

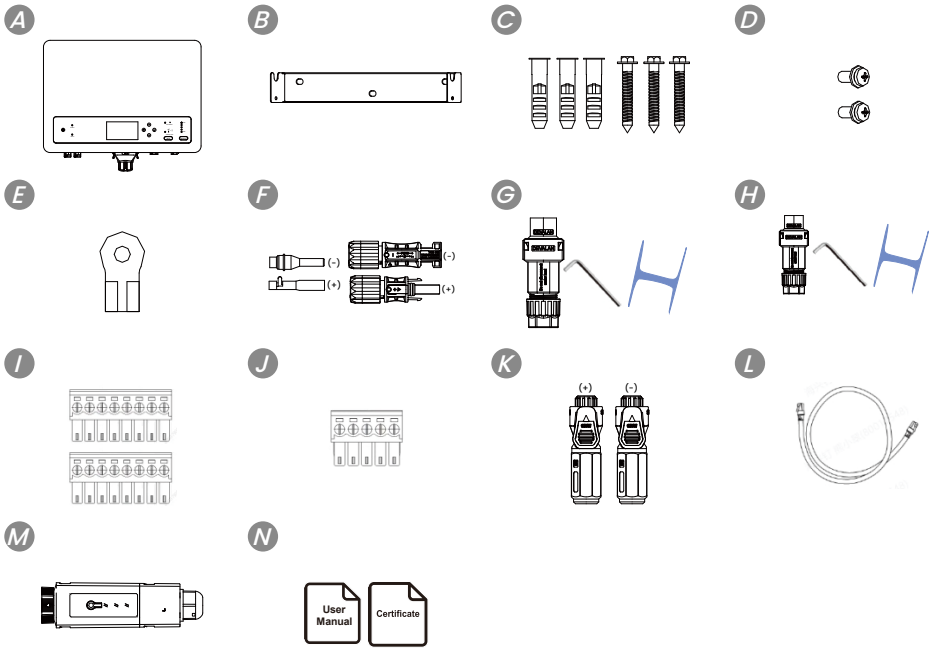

Figure 5-6 Scope of delivery

Table 5-7 Scope of delivery

Item	QTY	Description	Remark
A	1 pcs	Inverter	/
B	1 pcs	Bracket	For hanging the inverter
C	3 pairs	Expansion tubes & self-tapping screws	For securing the inverter bracket
D	2 pcs	M5*12 screws	For fixing the inverter with the inverter bracket
E	1 pcs	Grounding terminal	For PE cable wiring
F	2 pairs	PV pin terminals (+/-) PV connectors (+/-)	For PV cables wiring

Item	QTY	Description	Remark
G	1 pcs	Grid connector and tools	For Grid cable wiring
H	2 pcs	EPS and GEN connector	For EPS and generator/ smart loads cable wiring
I	2 pcs	8-pin terminal blocks	For signal cable wiring
J	1 pcs	5-pin terminal block	For signal cable wiring
K	1 pair	Battery connector (+/-)	For battery cable wiring
L	1 pcs	Parallel cable (with RJ45 connectors)	For parallel connection
M	1 pcs	Stick logger	For providing wireless data transmission
N	2 pcs	Documents	User Manual & Certificate

NOTE

- Contact the local distributor if any accessories miss.

5.3 Inverter Handling Requirement

Before installation, move the package to the installation site, remove the outer package and take the inverter out of the carton with appropriate personnel.

CAUTION

Improper handling may cause personal injury!

- Arrange an appropriate number of personnel to carry the inverter according to its weight, and installation personnel should wear protective equipment such as anti-impact shoes and gloves.
- Pay attention to the center of gravity of the inverter to avoid tilting during handling.
- DO NOT place the inverter directly on a hard ground in case of any damage to the enclosure of the inverter. Protective materials such as sponge pad or foam cushion should be placed underneath the inverter.
- Carry and move the inverter by holding the corners of the inverter. Do not move the inverter by holding its terminals.

6 Mechanical Installation

WARNING

- Ensure that there is no electrical connection before installation.
- Before drilling, ensure that the wall is free from any electrical wiring or plumbing to avoid electrical hazards or pipe damage.
- Check and confirm that the wall is solid enough to bear the weight of the inverter.

CAUTION

- Before installation, personal protective equipment must be worn.
- The inverter is heavy, please handle it with care during transport and installation to avoid injury.

NOTE

- Install the inverter in a correct angle and direction.
- Notice that the dimensions of the inverter to ensure that the inverter installation meets the requirements.
- Take the inverter dimensions and the bracket into consideration to select a good installation location

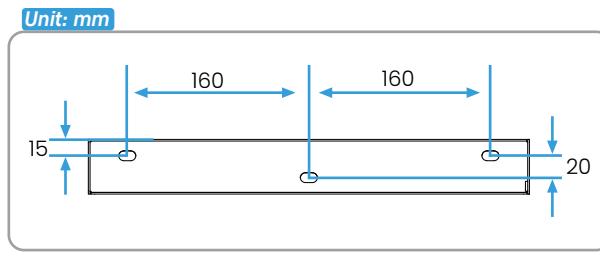

Figure 6-7 Inverter dimensions

Mounting Procedure

Step 1: Take out the inverter, bracket, expansion tubes & self-tapping screws and M5*12 screws from the inverter accessory.

Step 2: Locate the bracket.

- Put the bracket on the wall with a spirit level on its top to ensure that the bracket is level.
- Mark the drilling holes through the bracket with a marker.

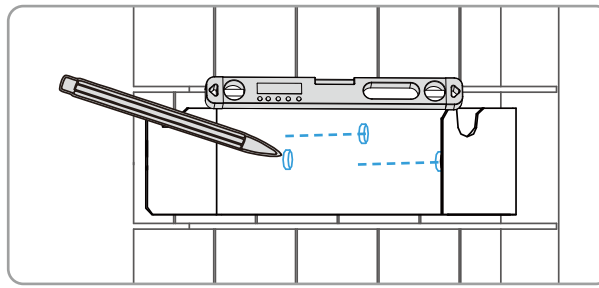

Figure 6-8 Locate the bracket

Step 3: Remove the bracket and drill marked holes at the depth of at least 50mm.

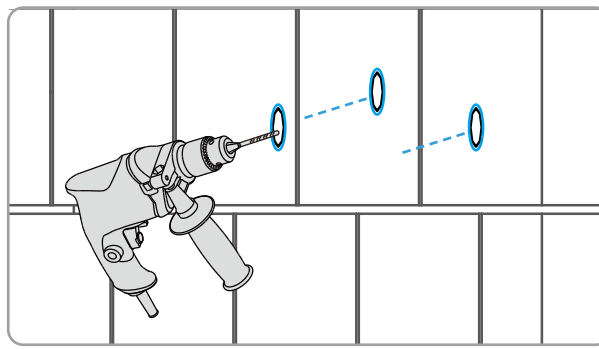

Figure 6-9 Drill holes

Step 4: Install the inverter bracket.

- Knock expansion tubes into the holes.
- Align the holes of the bracket with the holes on the wall.
- Insert self-tapping screws through the bracket into the wall.

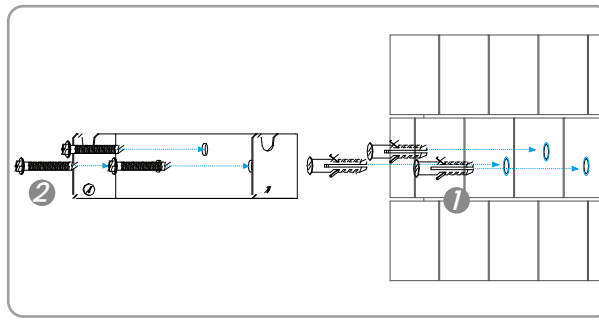

Figure 6-10 Install the bracket

Step 5: Secure self-tapping screws with a socket spanner.

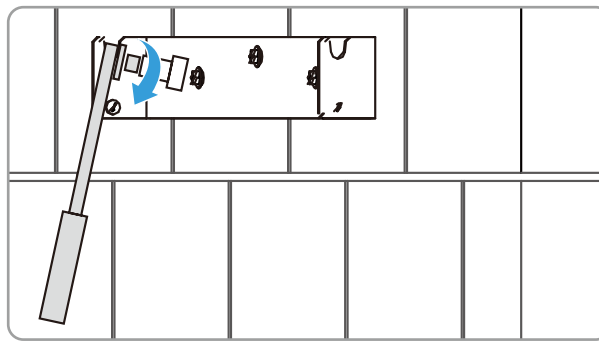

Figure 6-11 Secure the bracket

Step 6: Hang the inverter onto the bracket.

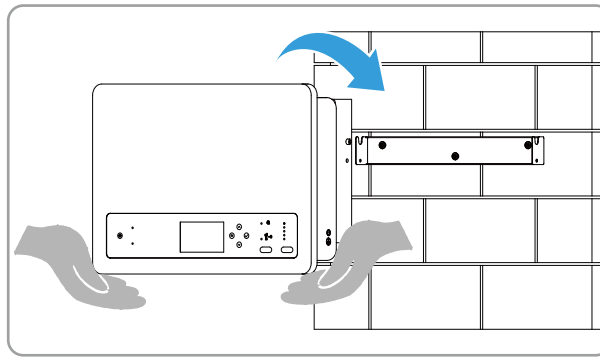

Figure 6-12 Hang the inverter

Step 7: Install the two M5*12 screws on both sides of the inverter to secure the inverter and the bracket with a phillips screwdriver. (Torque: 3.0 N.m)

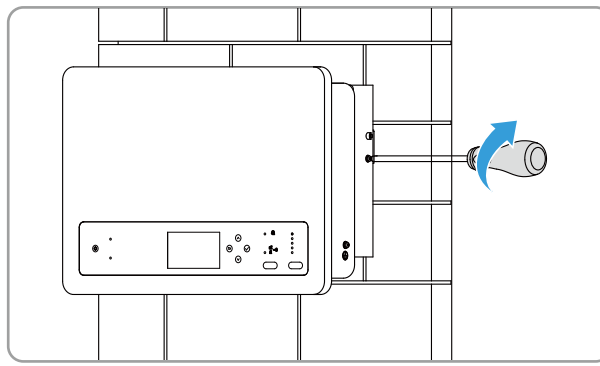

Figure 6-13 Secure the inverter and bracket

7 Electrical Connection

DANGER

Danger to life due to a high voltage inside the inverter!

- The PV string will generate lethal high voltage when exposed to sunlight. Before starting electrical connections, disconnect the DC and AC circuit breakers and prevent them from inadvertent reconnection.
- All operations, cables and parts specification shall be in compliance with local laws and regulations in the process of electrical connection.
- Ensure that all cables are free from voltage and current before performing cable connection.

WARNING

- Any improper operations during cable connection can cause device damage or personal injury. Damage to the product caused by incorrect wiring is not covered by the warranty.
- Wear personal protective equipment like safety shoes, safety gloves, and insulating gloves during electrical connections.
- All cables must be firmly attached, undamaged, properly insulated and adequately dimensioned.
- All cable wiring must be performed by qualified personnel.

NOTE

- Comply with the safety instructions related to the PV strings and the regulations related to the utility grid.
- All electrical connections must be in accordance with local and national standards.
- Only with the permission of the utility grid, the inverter can be connected to the utility grid.
- The cable colors in figures in this manual are for reference only. Please select cables according to local cable standards.
- Install the external protective grounding cable first when performing electrical connection and remove the external protective grounding cable last when removing the inverter.
- When the inverter is powered on, the EPS port is charged. Power off the inverter first if maintenance is required for the loads connected with EPS port. Otherwise, it may cause electric shock.

7.1 Electrical Connection Diagram

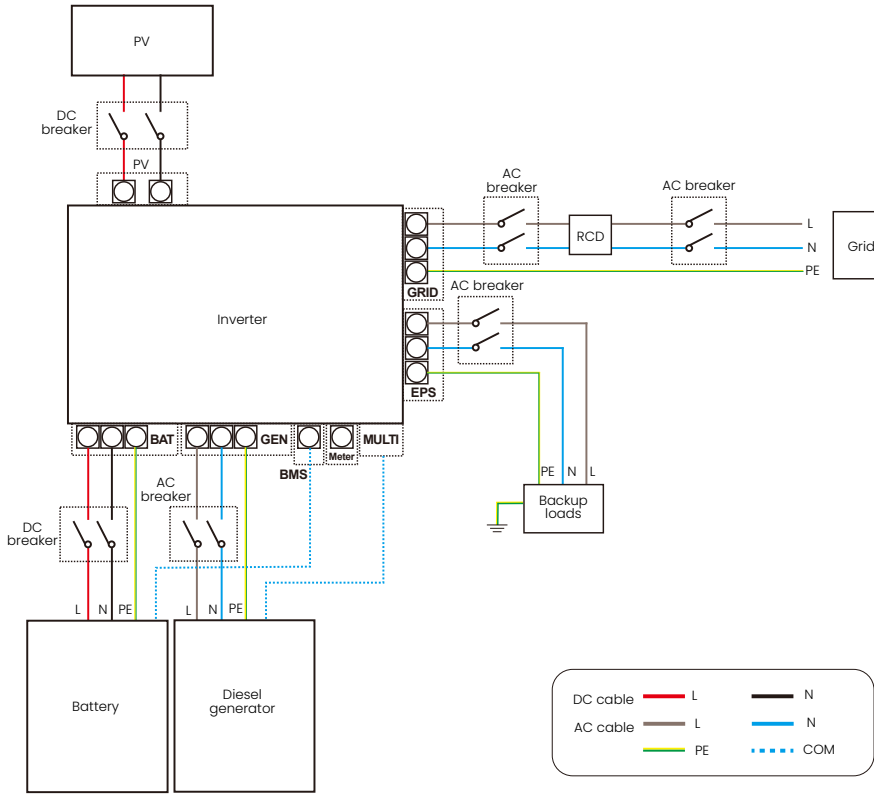

Figure 7-14 Electrical connection diagram

NOTE

- Here a diesel generator is connected to the GEN port of the inverter. You can choose to connect smart loads to the GEN port.
- The number of PV strings connected to inverters is for an example.

7.2 Overview of Inverter Connection Area

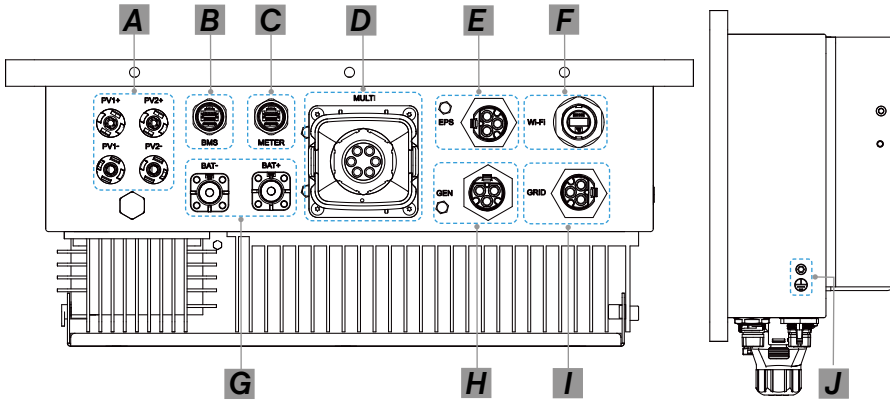

Figure 7-15 Overview of inverter connection area

Table 7-8 Introduction to inverter connection area

No.	Description
A	PV input terminals for PV cable connection
B	BMS communication terminal for lithium battery connection
C	Meter terminal (not applicable to GF1 series inverter)
D	MULTI terminal for parallel, DRM communication connection and etc.
E	EPS terminal for EPS loads connection
F	Wi-Fi terminal for a stick logger connection
G	Battery input terminal for battery power cable connection
H	GEN terminal for either a diesel generator or smart loads connection as needed
I	GRID terminal for connecting to the grid
J	Additional grounding terminal

7.3 PE Connection

Good grounding for the inverter helps resist the impact of surge voltage and improve the EMI performance. Connect the PGND cable before connecting the AC power cables, DC power cables, and communication cables.

DANGER

- There are large currents during the inverter's operation. If the inverter is powered on and put into operation without being grounded, it may lead to electric shock hazards or failures of major protective functions such as surge protection. Therefore, before powering on the inverter, ensure it has been reliably grounded; otherwise, damages caused by this will not be covered by warranty.
- Before any electrical connection, ensure that the grounding cable is reliably connected.

WARNING

- It is recommended that both the external protective grounding terminal and the AC side grounding terminal be reliably grounded.
- All non-current carrying metal parts and device enclosures in the PV power system should be grounded such as the inverter enclosure, subconstruction of PV modules and etc.
- Ensure that the PE cable is securely connected. Otherwise, electric shocks may occur.
- Do not connect the neutral wire to the enclosure as a PE cable. Otherwise, electric shocks may occur.

NOTE

- The PE point at the AC output port is used only as a PE equipotential point, and cannot substitute for the PE point on the enclosure. Make sure the two terminals are both grounded reliably.
- It is recommended that silicagel or paint should be used around the grounding terminal after the PE cable is connected.

Table 7-9 Materials for PE connection

Materials	Source
8AWG/ 10 mm^2 one-core copper cable	Self-prepared
Grounding terminal	Delivery scope

Wiring Procedure

Step 1: Strip 5~7 mm insulation off the PE cable as below.

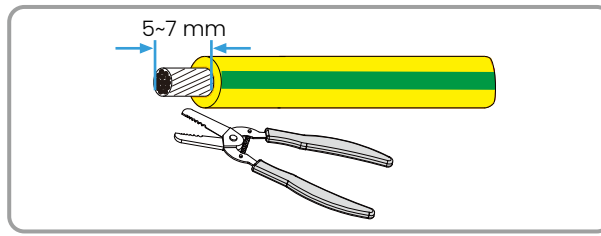

Figure 7-16 Strip PE cable

Step 2: Thread the cable through materials.

- Cut 28~29 mm heat shrink tubing and thread the stripped end through the tubing.
- Insert the stripped end into the grounding terminal.

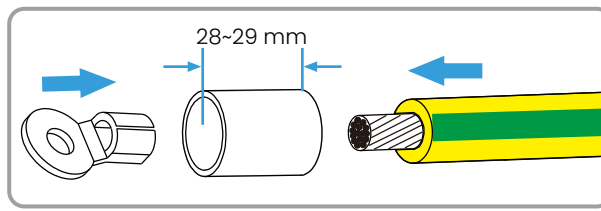

Figure 7-17 Assemble the cable

Step 3: Crimp the grouding terminal with a crimping tool

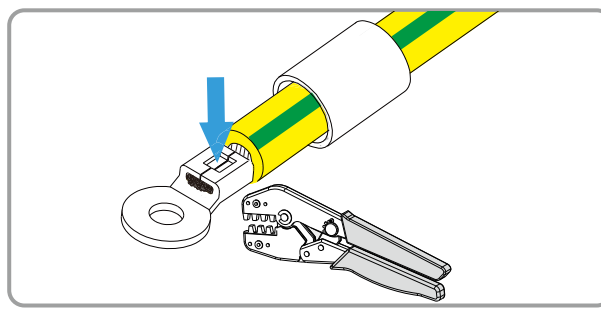

Figure 7-18 Crimp grounding terminal

Step 4: Pull the tubing backward to cover the connection section and blow it with a heat gun to ensure that no conductor is exposed.

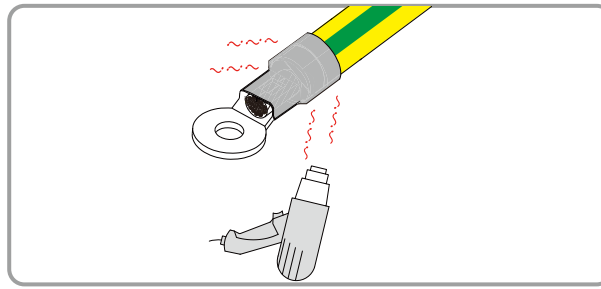

Figure 7-19 Insulate the connection section

Step 5: Connect the assembled PE to the inverter.

- Loosen the screw on the grounding port on the inverter.
- Connect the assembled PE cable to the grounding port.
- Secure the cable with the screw. (Torque: 1.2 N·m)

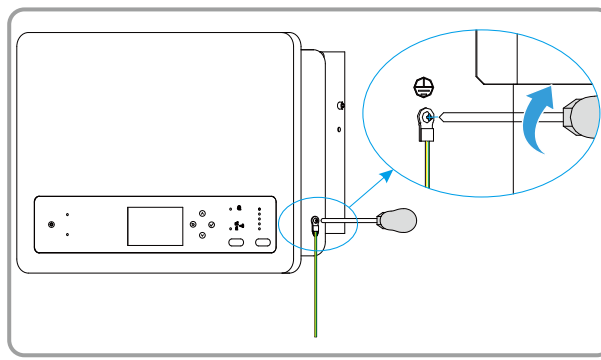

Figure 7-20 Connect PE cable

7.4 GRID and EPS Connection

WARNING

- Ensure that the inverter is totally isolated from any DC or AC power before connecting AC cables.
- Only with the permission of the local grid department, the inverter can be connected to the grid.
- Before commencing AC wiring, please ensure all AC circuit breakers are switched off.
- DO NOT connect the AC (GRID) cable and AC (EPS) cable together.
- When you want to use both on-gird power and backup power, please connect both with Grid output and EPS output. When you want to use on gird only, please connect with Grid output and float EPS output.
- Determine whether an AC circuit breaker with greater overcurrent capacity is required based on actual conditions.
- The grid and off-grid voltage and frequency must be in the permissible range.
- Never connect a load between the inverter and the circuit breaker.
- DO NOT connect grid power cable to the EPS or GEN port, otherwise it may cause inverter damage or fire hazards.

WARNING

- Risk of inverter damage due to incorrect cable connection. Do not connect the grid power wires to EPS port or connect the EPS cable to the grid.
- An independent circuit breaker must be installed on the EPS side to cut off the inverter from backup loads when necessary.
- Decide which household appliances should be included in the EPS circuit and carry out any required re-wiring.
- An external AC circuit breaker should be installed on the output side of the inverter and the grid side (between inverter and the grid) to ensure safe disconnection from the grid. Another external backup (EPS) circuit breaker should be installed at the output side of the inverter (between inverter and loads) to ensure safe disconnection.
- With an integrated universal current-sensitive residual current monitoring unit included, the inverter will disconnect immediately from the mains power once a fault current with a value exceeding the limit is detected. However, if an external residual current device (RCD) (type A is recommended) is mandatory, the switch must be triggered at a residual current of 300 mA (recommended).

Table 7-10 Materials for GRID and EPS connection

Materials	Source
8 AWG/ 10 mm^2 outdoor one-core/ three-core copper cable	Self-prepared
GRID connector	Delivery scope
EPS connector	Delivery scope
AC circuit breakers	Self-prepared

NOTE

- The size of the GRID connector is larger than that of the EPS connector.
- Notice that the GRID and EPS connector shares the same assembling method.

Wiring Procedure

Step 1: Strip the Grid and EPS cable as below.

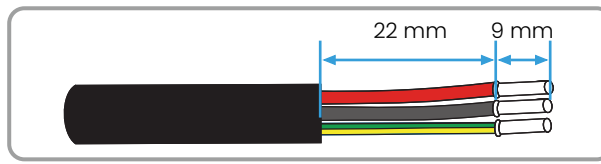

Figure 7-21 Strip Grid and EPS cables

Step 2: Take out the larger GRID connector and smaller EPS connector from the inverter accessory. And disassemble the connector into four parts.

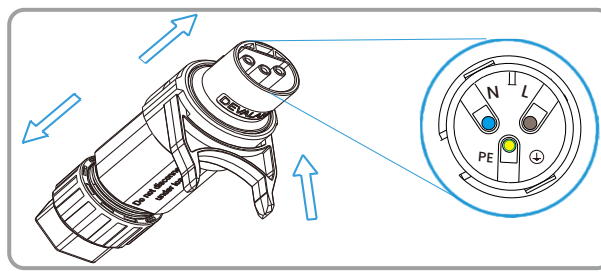

Figure 7-22 Disassemble the GRID and EPS connector

Step 3: Assemble the GRID and EPS connector with Grid and EPS cables respectively.

- Loosen the screws on the GRID and EPS connector.

NOTE

- DO NOT fully remove the screws on the terminals of the GRID and EPS connectors to prevent loss.

- Thread stripped cables through the swivel nut, sleeve, body and connect stripped L, N and PE cables to the L, N and PE terminal respectively and secure the cables with the connectors with an Allen key. (Torque: 0.8 N.m)
- Assemble the connectors and tighten the GRID and EPS connectors.

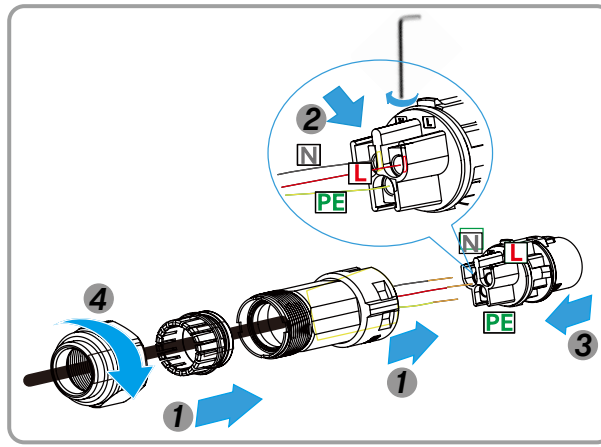

Figure 7-23 Assemble GRID and EPS connectors with cables

Step 4: Connect assembled GRID connector (larger) and EPS connector to the GRID and EPS port of the inverter respectively.

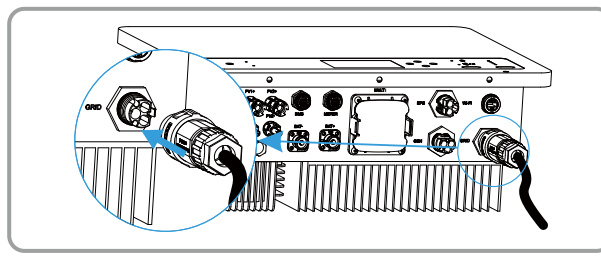

Figure 7-24 Connect to the GRID port

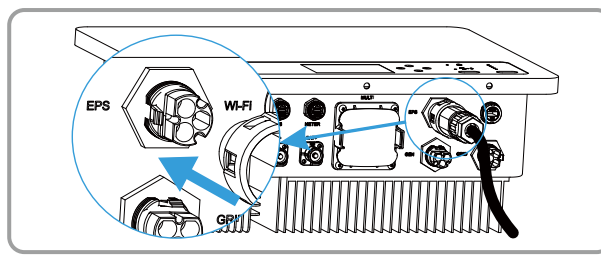

Figure 7-25 Connect to the EPS port

7.5 PV Connection

DANGER

Danger of electric shock!

- The PV array will generate lethal high voltage once exposed to sunlight. Ensure that all cables are voltage-free before performing electrical operations.
- DO NOT connect the AC circuit breaker before completing electrical connection.

WARNING

- Ensure that the PV arrays are well insulated to the ground before connecting it to the inverter.
- Arc or contactor over-temperature may occur if PV connectors are not firmly connected in place.
- Ensure that the voltage, current and power ratings of the PV arrays are within the permissible range.
- Ensure that polarity is correct. The inverter will not run properly if any PV polarity is reversed.
- This series inverter is designed with 2 MPPT trackers, if the inputs of PV panels are paralleled, please consult with your local distributor for technical support.
- To avoid any malfunction, do not connect any PV Arrays with possible current leakage to the inverter. For example, grounding PV Arrays will cause current leakage to the inverter.
- Ensure that an external circuit breaker is installed between PV panels and the inverter and is turned off before cable wiring.

NOTE

- To ensure IP66 protection, use the right PV plugs in the accessory.
- Damage to the device due to the use of incompatible terminals shall not be covered by the warranty.

Table 7-11 Materials for PV connection

Materials	Source
6 AWG/ 4 mm^2 PV cables	Self-prepared
PV pin terminals (+/-)	Delivery scope
PV connectors (+/-)	Delivery scope
DC circuit breaker (optional)	Self-prepared

Wiring Procedure

Step 1: Strip PV cables and connect PV pin terminals.

- Prepare 6 AWG/ 4 mm^2 positive and negative PV cables, take out PV pin terminals and PV connectors from the inverter accessory.
- Strip 6~8 mm insulation off.
- Insert stripped positive and negative PV cables into positive and negative PV pin terminals respectively.

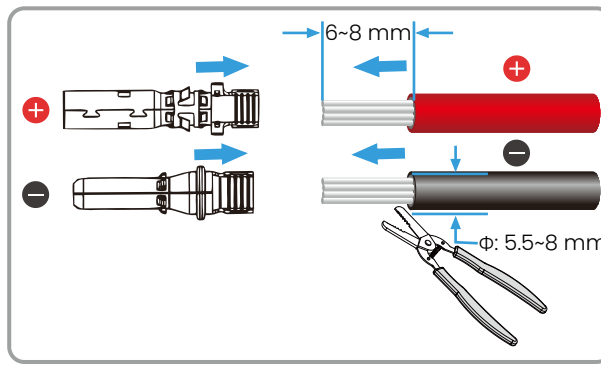

Figure 7-26 Strip PV cables

Step 2: Crimp positive and negative PV pin terminals with PV cables with a MC4 crimping tool.

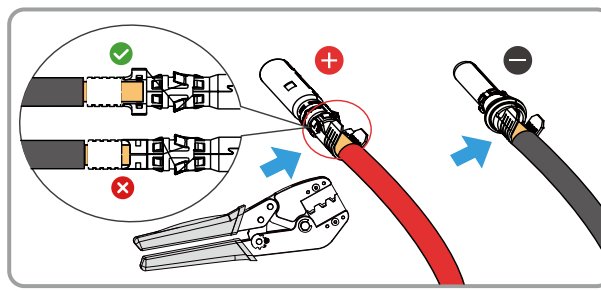

Figure 7-27 Crimp PV pin terminals

Step 3: Connect assembled PV cables to PV connectors.

- Disassemble positive and negative PV connectors: PV connector and its swivel nut.
- Thread assembled positive and negative PV cables through the swivel nuts of positive and negative PV connectors respectively.
- Insert assembled positive and negative PV cables into positive and negative PV connectors respectively. They are well connected until a "click" sound is heard.

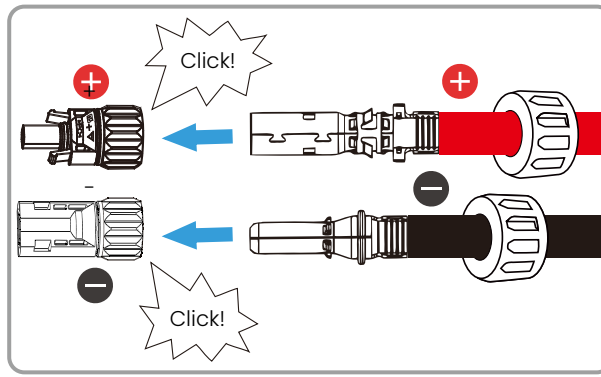

Figure 7-28 Connect PV connectors

Step 4: Pull the swivel nuts backward and then tighten swivel nuts and PV connectors. (Torque: 2.6~2.9 N.m)

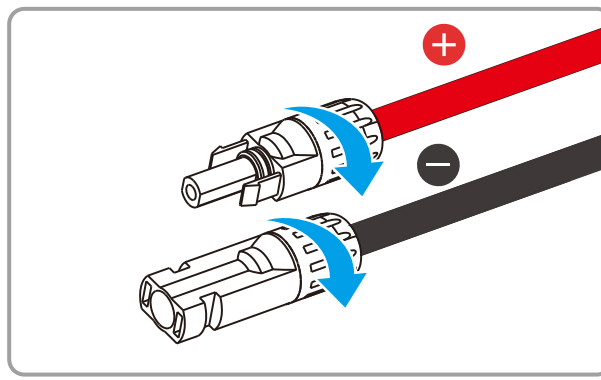

Figure 7-29 Assemble PV connectors

Step 5: Measure the voltage of each assembled PV string with a multimeter and confirm that the voltage is within an appropriate range.

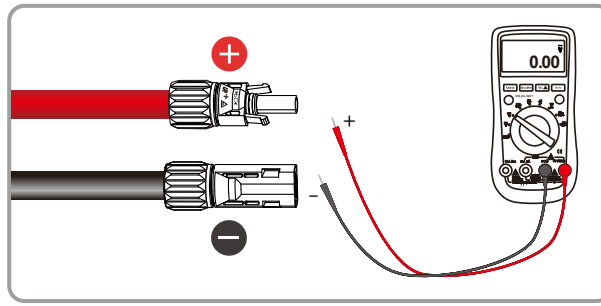

Figure 7-30 Measure the voltage of PV strings

Step 6: Connect assembled positive and negative PV cables to positive and negative PV ports on the inverter respectively.

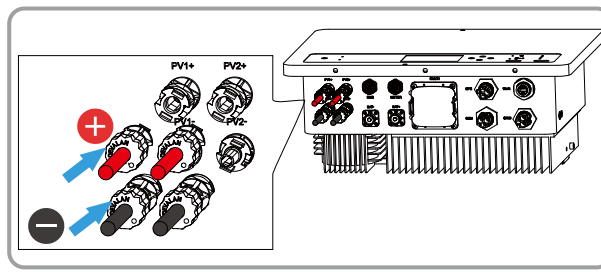

Figure 7-31 Connect assembled PV cables

NOTE

- DO NOT crimp the two metal sheets (pictures below).
- These are fixing structure of metal core and its plastic shell. Crimping of the two metal sheets will result in failure of assemble, which may cause contact problems, and even fire in extreme cases.
- Check the cable connection of the PV string for polarity correctness and ensure that the open circuit voltage in any case does not exceed the inverter input limit of 500V.

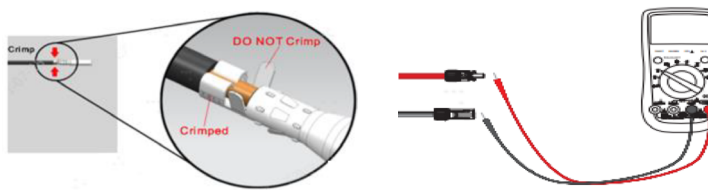

7.6 Battery Connection (BAT&BMS)

DANGER

- Be careful about any electric shock or chemical hazard.
- A short circuit in the battery may cause personal injury. The instantaneous high current caused by a short circuit can release a large amount of energy and may cause a fire.
- Ensure that the open circuit voltage of the battery is within the permissible range of the inverter.
- Only use properly insulated tools to prevent accidental electric shock or short circuits. If insulated tools are not available, use electrical tape to cover the entire exposed metal surfaces of the available tools except their tips.
- Before connecting the battery cable, ensure that the switches of inverter and the battery are all disconnected.
- Connect battery cables with correct polarity. If battery cables are reversely connected, the solar inverter may be damaged.
- It is forbidden to connect and disconnect the battery cables when the inverter is running, otherwise it may cause electric shock.
- Do not connect one battery pack to more than one inverter at the same time. Otherwise, it may cause damage to the inverter.
- It is forbidden to connect loads between the inverter and batteries.
- During installation and operation of the inverter, ensure that the batteries are not short-circuited to the ground. Failure to do so may result in damage to the unit. The resulting damage is not covered by the warranty.

NOTE

- For safe operation and compliance, a two-pole DC circuit breaker with overcurrent protection should be installed between the inverter and the battery without a built-in DC breaker, ensure that an external DC breaker is connected.
- This inverter can only be connected with Livoltek low-voltage lithium batteries with nominal voltage now. If you choose other lithium batteries, please consult Livoltek for compatibility. Otherwise, the inverter will not work normally.
- If you do not have any battery now, you can float BAT terminal, and this off-grid inverter will only work as a PV inverter.

Battery Power Cable Wiring Procedure

Table 7-12 Materials for battery connection

Materials	Source
Battery power cable	Self-prepared
DC circuit breaker	Self-prepared
Battery positive and negative connectors	Delivery scope

Step 1: Strip 14~18 mm insulation off battery cables.

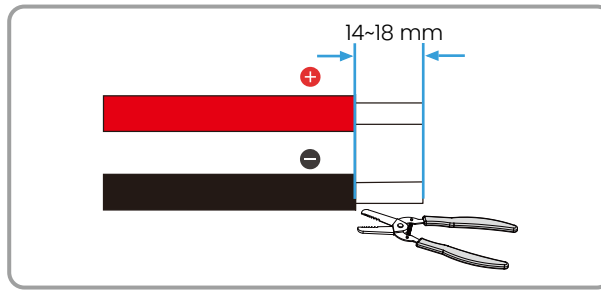

Figure 7-32 Strip battery cables

Step 2: Assemble battery connectors with battery power cables.

- Disassemble positive and negative battery connectors: battery sleeve and battery connector.
- Thread stripped positive and negative battery cables through the sleeves respectively.
- Insert positive and negative battery cables into positive and negative battery connector respectively.
- Crimp battery connectors with a hydraulic clamp.

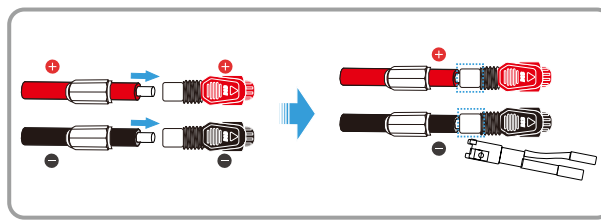

Figure 7-33 Connect battery pin terminal

NOTE

- Before connecting to battery connectors, ensure that stripped battery cables already have been threaded through the sleeves.

Step 3: Tighten the sleeves to well assemble battery connectors.

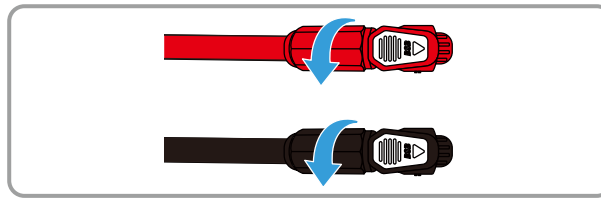

Figure 7-34 Connect battery connectors

Step 4: Connect assembled positive and negative battery connector to BAT+ and BAT- port on the inverter respectively.

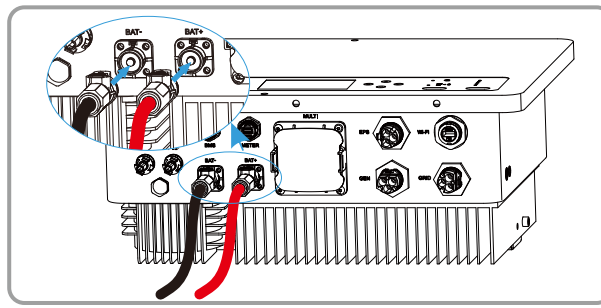

Figure 7-35 Connect battery cables to the inverter

BMS Wiring Procedure

Table 7-13 Materials for BMS connection

Materials	Source
Network cable	Self-prepared
RJ45 connector	Self-prepared

Step 1: Strip the network cable and crimp the stripped end with a RJ45 connector in accordance with the BMS pin definition below.

Pin	Color	Definition
1	white orange	BMS_CAN_H
2	orange	BMS_CAN_L
3	white green	null
4	blue	null
5	white blue	null
6	green	null
7	white brown	null
8	brown	null

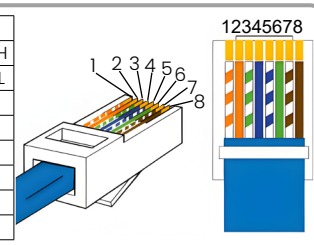

Figure 7-36 Crimp BMS network cable

Step 2: Connect the assembled network cable to the BMS port.

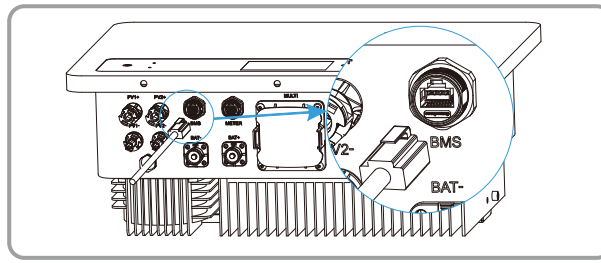

Figure 7-37 Connect to BMS port

7.7 GEN Connection

Either a diesel generator or smart loads can be connected to the GEN port of the inverter.

Table 7-14 Materials for GRID and EPS connection

Materials	Source
8 AWG/ 10 mm^2 outdoor one-core/ three-core copper cable	Self-prepared
GEN connector	Delivery scope
DC circuit breaker	Self-prepared

NOTE

- The size of the GRID connector is larger than that of the GEN and EPS connector.
- Notice that the GEN, GRID and EPS connector shares the same assembling method.

Wiring Procedure

Step 1: Strip a cable as below.

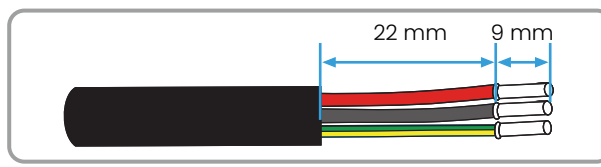

Figure 7-38 Strip a cable

Step 2: Take out the GEN connector from the inverter accessory. And disassemble the connector into four parts.

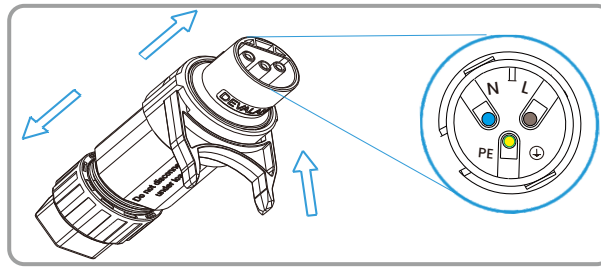

Figure 7-39 Disassemble the GEN connector

Step 3: Assemble the GEN connector with a cable.

- Loosen the screws on the GEN connector.

NOTE

- DO NOT fully remove the screws on the terminals of the GEN connector to prevent loss.

- Thread stripped cables through the swivel nut, sleeve, body and connect stripped L, N and PE cables to the L, N and PE terminal respectively and secure the cables with the connectors with an Allen key. (Torque: 0.8 N.m)
- Assemble the connectors and tighten the GEN connector.

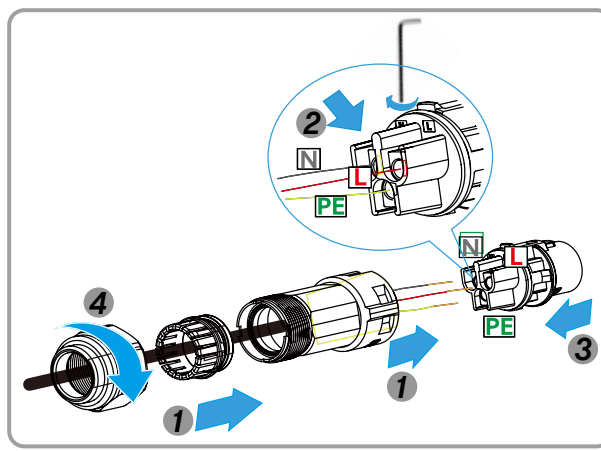

Figure 7-40 Assemble GEN connector with cables

Step 4: Connect assembled GEN connector to the GEN port of the inverter.

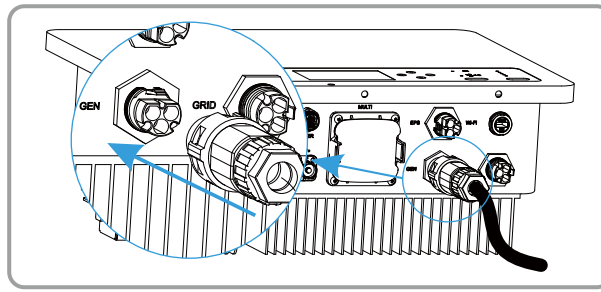

Figure 7-41 Connect to the GEN port

DO Wiring Procedure (for a diesel generator)

NOTE

- If you choose to connect a diesel generator to the GEN port of the inverter, you should connect signal cables to the dry contact terminals of the MULTI port.

Table 7-15 Materials for dry contact connection

Materials	Source
5-pin terminal block	Delivery scope
Signal cable	Self-prepared

Step 1: Remove the MULTI connector from the inverter.

Step 2: Thread signal cables through the MULTI connector, strip signal cables, insert stripped cables into the 5-pin terminal block, plug assembled 5-pin terminal block into CON5 terminal in the MULTI port and install the MULTI connector back to the inverter.

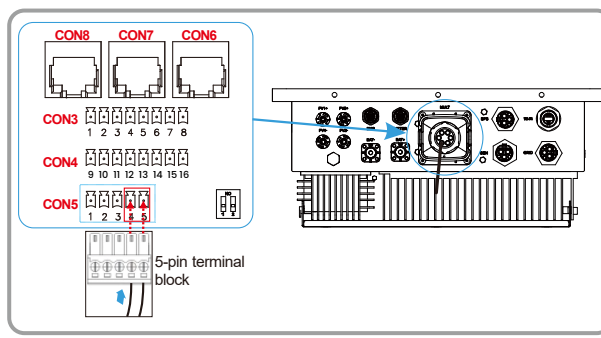

Figure 7-42 Connect signal cables to DO terminals

7.8 Function Port Connection (MULTI & METER)

7.8.1 Function Port Introduction

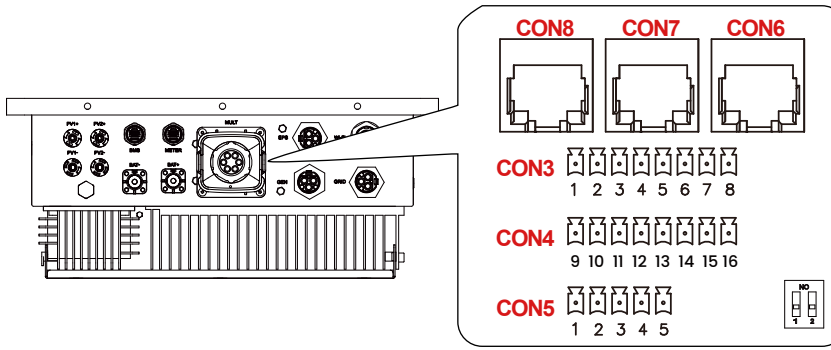

Figure 7-43 MULTI port introduction

Table 7-16 MULTI pin definition

Terminal	Pin	Definition	Function	Terminal	Pin	Definition	Function
CON6	1	parallel_485A	Parallel communication	CON7	1	parallel_485A	Parallel communication
	2	parallel_485B			2	parallel_485B	
	3	NULL			3	NULL	
	4	GND			4	GND	
	5	NULL			5	NULL	
	6	NULL			6	NULL	
	7	parallel_CANH			7	parallel_CANH	
	8	parallel_CANL			8	parallel_CANL	
CON8	1	DRM1/5	DRM	CON3	1	CT1_+	Not applicable to GF1 series inverter
	2	DRM2/6			2	CT1_-	
	3	DRM3/7		CON4	/	/	Reserved
	4	DRM4/8		CON5	4	DO1_KEY+	Dry contact for a diesel generator
	5	REF_GEN/0			5	DO1_KEY-	
	6	COM_LOAD/0		DIP switch	/	/	Turn it on to connect to the 120Ω termination resistor for parallel
	7	NC					
	8	NC					

NOTE

- The METER port is not applicable to GF1 series inverter.

7.8.2 Wiring procedure

Step 1: Remove the MULTI connector from the inverter.

Step 2: Disassemble the MULTI connector, thread network cables and signal cables through the MULTI connector.

Step 3: Assemble network cables and signal cables.

- Assemble network cables with RJ45 connectors: strip cables, insert wires into the RJ45 connectors in accordance with the pin definition as needed and crimp the connector with a crimping tool.

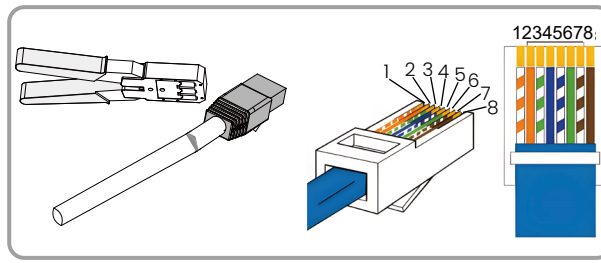

Figure 7-44 Assemble network cables

- Assemble signal cables with 8-/5-pin terminal block: strip cables, insert stripped end into 8-/5-pin terminal block in accordance with the pin definition as needed.

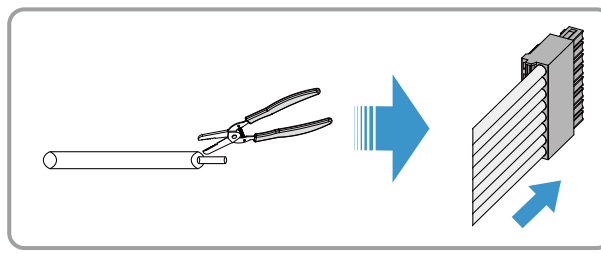

Figure 7-45 Assemble signal cables

Step 4: Connect assembled RJ45 connectors and terminal blocks into corresponding terminals in the MULTI port of the inverter.

Step 5: Connect the MULTI connector to the inverter and tighten it.

7.8.3 Parallel Connection (MULTI)

Parallel function shall be available in Q4 of 2025.

Parallel Connection Diagram

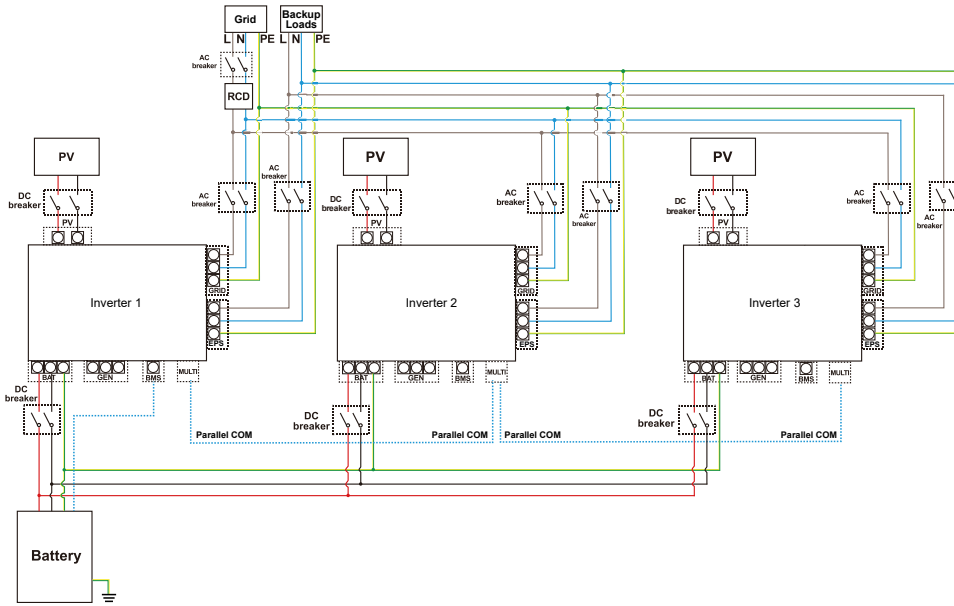

Figure 7-46 Three inverters in parallel

NOTE

- The number of PV strings connected to inverters is for an example.

Wiring Procedure

Table 7-17 Materials for parallel communication connection

Materials	Source
Parallel cable	Delivery scope

NOTE

- Please refer to the previous sections to complete PV, battery, grid and EPS connection. Refer to the following steps to complete parallel communication connection.

Step 1: Remove the MULTI connector from the inverter, disassemble the connector, thread the parallel cable through the connector.

Step 2: Connect the parallel cable as below. And turn on the DIP switch of the first and last inverter in the parallel system to connect to the 120Ω termination resistor for parallel communication.

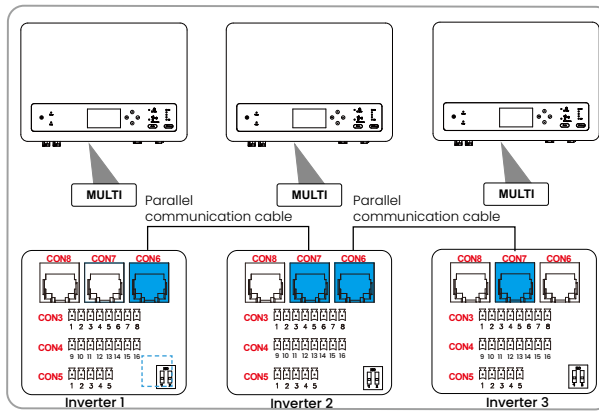

Figure 7-47 Parallel communication cable connection

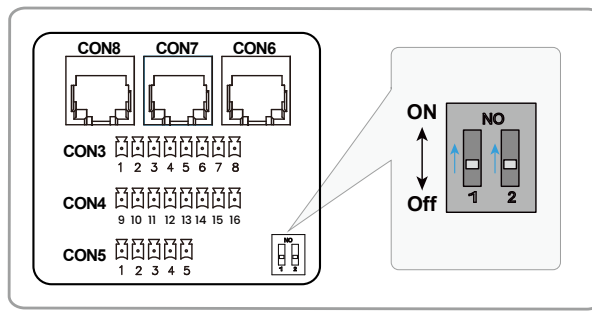

Figure 7-48 Turn on DIP switches

Step 3: Connect MULTI connectors to the MULTI port and tighten them.

7.9 Stick Logger Connection

The inverter provides a communication port, which can collect data and transmit data of the inverter to the monitoring website via a stick logger.

Wiring Procedure

Step 1: Remove the waterproof lid from Wi-Fi port of the inverter.

Step 2: Insert the stick logger from the inverter accessory into the Wi-Fi port.

Step 3: Tighten the swivel nut clockwise to secure the logger on the inverter.

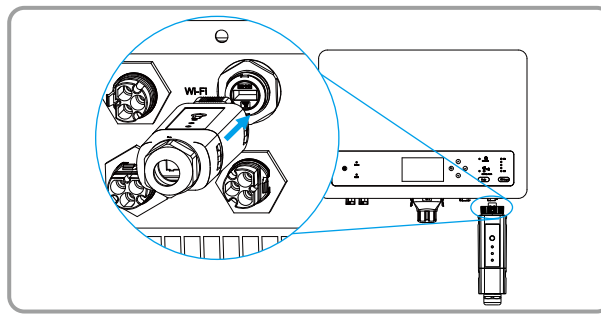

Figure 7-49 Stick logger connection

7.10 Installation and Electrical Connection Verification

Check the following items before turning on an inverter:

- No foreign objects are inside or on the inverter.
- All screws especially the screws used for electrical connections are tightened.
- The inverter is installed correctly and securely.
- All cables are connected according to *7 Elelctrical Connection*.
- Check there is no open circuit or short circuits at AC and DC terminals with a multi-meter.
- Idle terminals are sealed.
- All safety warning symbols are intact and complete on the inverter.
- The country marked on the packing box is in accordance with the installation site.
- The inverter is correctly and firmly fastened to the mounting bracket on the wall.
- An AC circuit breaker is correctly connected between inverter GRID port and the grid and ensure the circuit breaker is disconnected.
- An AC circuit breaker is correctly connected between inverter EPS port and critical loads and ensure that the circuit breaker is disconnected.
- For Li-Ion battery, ensure that the BMS communication cable has been correctly connected.

8 System Operation

8.1 Inverter LCD Display

Observe inverter indicators to obtain the inverter operation status.



Figure 8-50 Inverter LCD Display

Table 8-18 Indicators introduction

Indicator	Color	Status	Description
Status	Green	Steady on	The inverter is running normally. Or the inverter si upgrading software (with **Alarm** indicator steady on at the same time).
		Slow Flash	The inverter is in standby or off status.
		Flash	The inverter is starting and in self-checking status.
Alarm	Red	Steady on	The inverter is in fault status. Or the inverter is upgrading software (with **Status** indicator steady on at the same time). In the event of a fault condition while grid power is energized, the inverter shall supply power to EPS loads via a bypass path.
		Off	The inverter is running normally.

Table 8-19 Inverter keys introduction

Indicator	Function	Description
	System on/ off key	**System on/off** key is to start or stop the energy conversion of the inverter. • When the inverter is in off status, press the **System on/ off** key, and then the inverter starts, begins system self-checking and runs normally when the PV voltage exceeds the startup voltage. • When the inverter is running normally, press the **System on/off** key and then the inverter stops energy conversion. If the voltage still remains on the AC side, the EPS port will maintain load power supply viathe bypass path.
	Up key	Move the cursor to the upper part or increase the value
	Down key	Move the cursor to the lower part or decrease the value
	ESC key	Exit from the current interface or function
	Enter key	Confirm the selection

Indicator	Function	Description
	Work mode setting	**ECO Mode** (self-use mode) is to maximize the solar energy usage and minimize the grid import. It is the default work mode. **Battery First** mode (backup) is to maximize battery reserve SoC for improving the stability of power supply. **Method:** press the **Mode** key to set one of the two work modes. The work mode with green light is the current work mode.
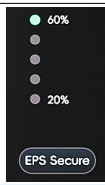	EPS Secure value setting	**EPS Secure** is set for battery reserved SoC for automatically turn on or turn off smart loads if connected. • When the actual battery SoC exceeds the **EPS Secure** value set, smart loads will be turned on automatically. • When the actual battery SoC is lower than the **EPS Secure** value set, smart loads will be turned off automatically.

8.2 Start-up Procedure

⚠ QUALIFIED PERSON

Step 1: Power on the Battery.

- Press the button to power on the battery.
- Turn on the DC breaker between the inverter and the battery connected.
- The inverter LCD display lights on and the real-time battery parameters can be checked on the display.

Step 2: Turn on the PV.

- Turn on the DC breaker between PV panels and the inverter. And then the inverter LCD display lights on, the **Status** indicator flashes and the real-time PV parameters can be checked on the display.

Step 3: Switch on loads.

- Turn on the circuit breaker(s) between the inverter and EPS loads/ smart loads (if connected) between the inverter and loads. The real-time loads parameters can be checked on the display.

Step 4: Power on the grid.

- Turn on the circuit breaker between the inverter and the grid. The inverter LCD display lights on and the **Status** indicator flashes. The real-time grid parameters can be checked on the display.

Step 5: Turn on a diesel generator (if connected).

- Turn on the generator (if the generator connected needs turning on manually) and the circuit breaker between the inverter and the generator.

Step 6: Configure the stick logger.

- Refer to *9.2 APP Setting* and scan the QR code to complete network configuration, register an account, build a site, add the inverter into your site via **My Livoltek** APP on

the installation site.

Step 7: Switch on the inverter.

- Press the System on/off key to turn on the inverter, the LCD display lights on, the Status indicator flashes, the inverter is self-checking. The inverter enters normal status and the Status indicator turns steady on.

Step 8: Observe the indicator.

- Observe the inverter indicators. Confirm the Alarm indicator is off and there is no fault reported on the display.

9 Setting

9.1 Setting on the Inverter Display

9.1.1 Setting Menu

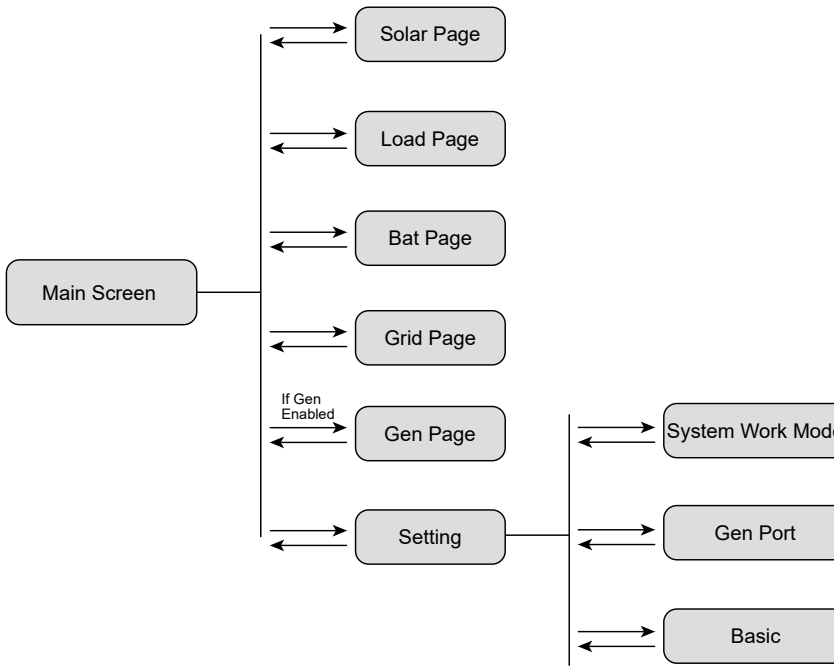

Figure 9-51 Setting menu

NOTE

- Please refer to the actual settings interface of the inverter.

9.1.2 Setting Items on the Display

You can touch anywhere on the inverter display or press any key to turn on the display.

Main interface

You can touch the icons on the display to enter different interfaces to get information or to perform settings as needed.

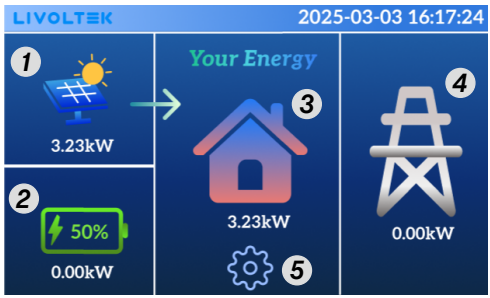

1	Solar page
2	Battery page
3	Load page
4	Grid page
5	Setting page

Solar page

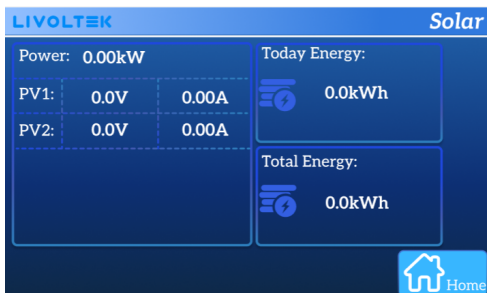

Touch the icon 1 to enter the solar page, you can view the real-time PV power, voltage and current of each PV string, today's PV energy and total PV energy in this interface.

Battery page

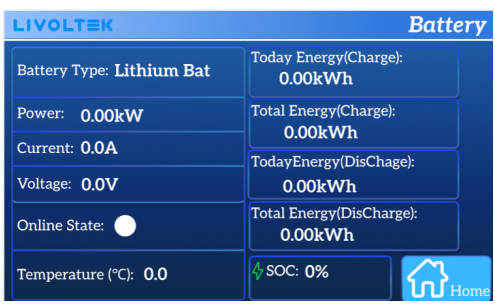

Touch the icon 2 to enter the battery page, you can view the battery type connected, the real-time power, current, voltage, online state and temperature of the battery, today's charging and discharging energy and total charging and discharging energy of the battery and the real-time battery SoC.

Load page



Touch the icon **3** to enter the load page, you can view the power, today's energy and total energy of loads connected.

Grid page

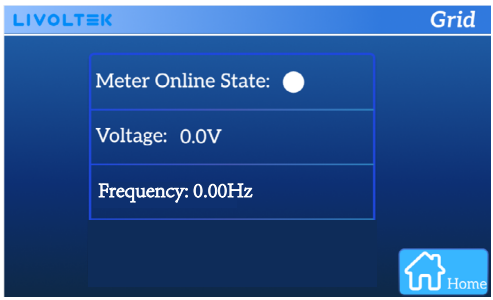

Touch the icon **4** to enter the grid page, you can view the meter online state, the real-time voltage, current and frequency of the grid.

Setting page

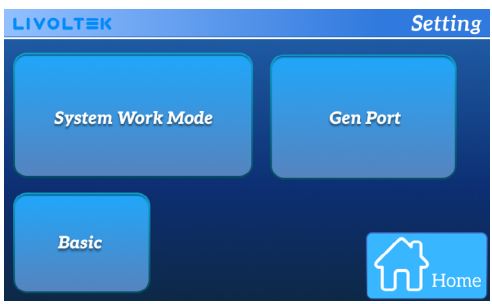

Touch the icon **5** to enter the setting page, you can perform settings via items displayed in this interface.

- Set a work mode in **System Work Mode** interface.
- Set generator or smart loads parameters in **Gen Port** interface as needed.
- Turn on/ shutdown/ restart the inverter and set the date & time at the installation site in **Basic** interface.

NOTE

- Here below are interfaces you can perform settings.

Settings in Basic interface

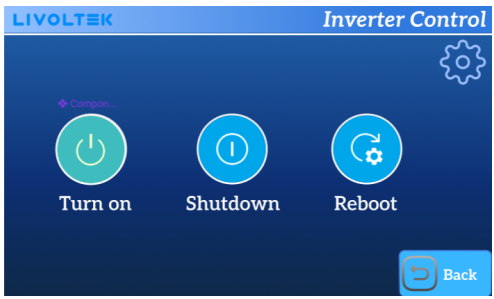

Path: touch **Basic** in **Setting** interface to enter **Basic** interface.

You can turn on, shutdown or restart the inverter in this interface.



Path: touch the setting icon at the top right corner of the **Basic** interface to enter **Date & Time** interface.

You can set the **Year**, **Month**, **Day**, **Hour** and **Minute** in accordance with the time of the installation site.

Settings in System Work Mode interface

Work Mode setting

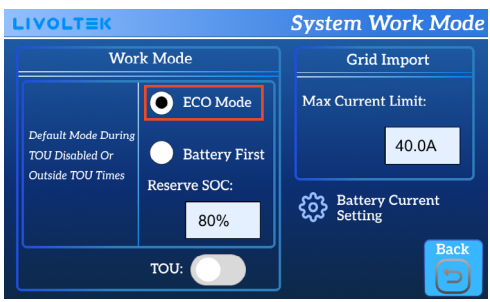

ECO Mode

ECO Mode (self-use) is to maximize the solar energy usage and minimize energy imported from the grid.
Refer to *2.5 Work Mode* to acquire more detailed information.

Path: click **ECO Mode** to confirm the work mode of the inverter.

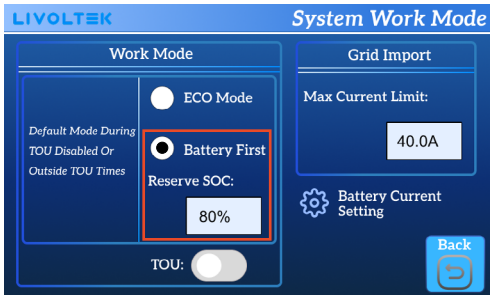

Battery First

Battery First (backup) work mode is to ensure that the battery reserves a minimum capacity fully charged when there is a grid outage. The battery shall never discharge when the actual battery SoC decreases to the set **Reserve SOC** and when there is grid input, the PV and grid will prioritize charging the battery.

Path: click **Battery First** to confirm the work mode of the inverter and set **Reserve SOC** to limit the battery discharging in this work mode.

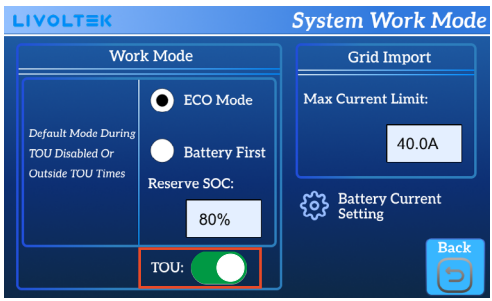

TOU

TOU (self-define) work mode is for charging or discharging the battery with a certain power under different time periods.
When any of the other two work modes is set with **TOU** mode,

- The TOU mode prioritizes the other two work modes within the time periods set in TOU mode.
- The inverter works in any of the other two work mode set when it is out of the time periods in TOU mode.

Settings in TOU mode

Step 1: Enable **TOU** function and enter **TOU** setting interface.

Step 2: Set battery charging or discharging mode in a time period.

- **Command**: set **Charge**, **Discharge** or **Stop** to define the battery charging or discharging status. **Stop** is set to release control over battery charging or discharging during this time period.
- **Time**: set the start and end time of a time slot within a natural day to control the battery's charging or discharging mode during that period.
- **Power**: set the parameter to limit the battery's charging or discharging power in a time period.
- **SOC**: set the parameter and the battery stops charging or discharging when the actual battery SoC reaches this value.

NOTE

- If you choose to disable and release some time period, set **Charge** or **Discharge** as **Stop**. And the inverter will run in any of the other two work modes already set in this time period.

Example 1: in time period 1 below, the battery charges from 2:00 to 5:00 at the power of 2 kW and the battery stops charging when the actual battery SoC reaches 10%.

Example 2: in time period 2 below, the battery discharges from 6:00 to 7:00 at the power of 3kW and the battery stops discharging when the actual battery SoC reaches 58%.

Example 3: in time period 4 below, the battery charges or discharges in accordance with any of the other two work modes already set.

Step 3: Touch ↓ to enter **TOU SET2** interface set the day within a week to repeat different charging or discharging time periods within a week.

Example: in **Time 1**, the battery charges from 2:00 to 5:00 at the power of 2 kW and the battery stops charging when the actual battery SoC reaches 10% every Thursday and Sunday.

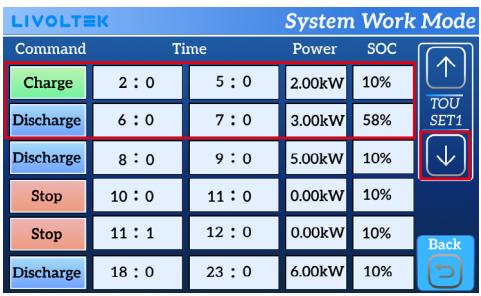

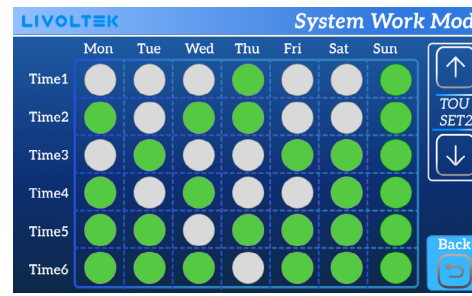

Grid Import limitation setting

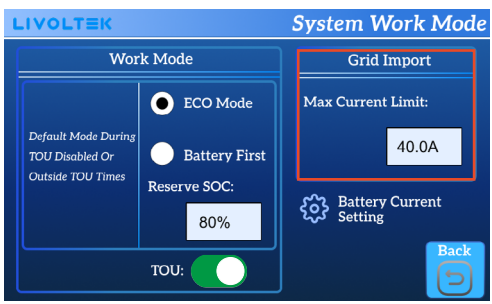

To avoid damage to the inverter due to excessive current imported from the grid, set **Max. Current Limit** on the inverter display immediately when the device is powered on.

Max. Current Limit: 0-40A for 3.6 kW/ 6kW inverter.

Battery Current setting

To limit the maximum charging current can prevent the battery from be overcharged by the grid or photovoltaic power, and avoid overheating or capacity degradation due to overload.

If overloading occurs due to simultaneous startup of high-power loads, to limit the discharging current can prevent the inverter from tripping.

- **Max Charge Current:** 0-125A for 3.6kW/ 6kW inverter.
- **Max Discharge Current:** 0-125A for 3.6kW/ 6kW inverter.

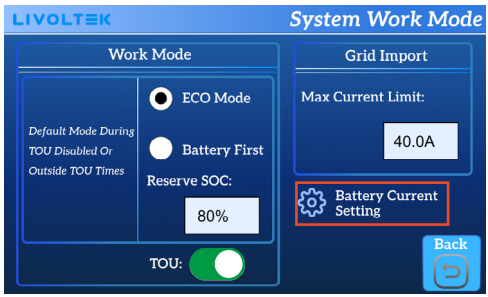

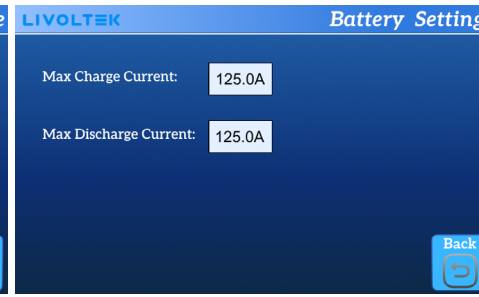

Gen Port setting

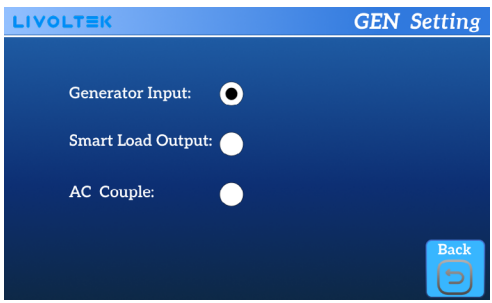

Touch **Gen Port** in the **Setting** interface and select to set parameters of a generator or smart loads actually connected.

NOTE

- AC Couple function is reserved for now.

Generator setting

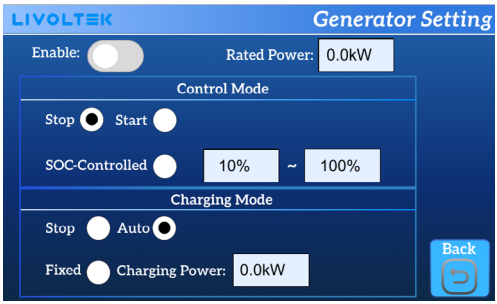

When a generator is connected to the **GEN** port of the inverter, touch **Generator Input** to enter **Generator Setting** interface.

Step 1: Enable this function.

Step 2: Set **Rated Power** (recommended 75% rated power of the generator connected).

Step 3: Set **Control Mode** to confirm a generator start-stop mode: **Stop**, **Start** or **SOC-Controlled**.

Table 9-20 Control mode setting

Control Mode	Description
Stop	Set **Stop** and you can manually stop the generator connected.
Start	Set **Start** and you can manually start the generator connected.
SOC-Controlled	Set **SOC-Controlled** and battery SoC range. The on and off of the generator is controlled by the actual battery SoC. For example, • When the actual battery SoC exceeds 10%, the generator is automatically turned on. • When the actual battery SoC is lower than 100%, the generator is automatically turned off.

Step 4: Set **Charging Mode** to confirm inverter's charging power control for the generator: **Stop**, **Auto** or **Fixed**.

Table 9-21 Charging mode setting

Charging Mode	Description
Stop	Set **Stop** and the generator stops charging batteries.
Auto	Set **Auto** and the generator charges batteries in accordance with the surplus energy of the system.
Fixed	Set **Fixed** and **Charging Power**, the generator charges batteries at the set **Charging Power**.

Smart Load setting

When smart loads are connected to the **GEN** port of the inverter, touch **Smart Load Output** to enter **Smart Load Mode** interface.

You can perform settings in Smart Load Mode interface to control the on and off of smart loads via the inverter.

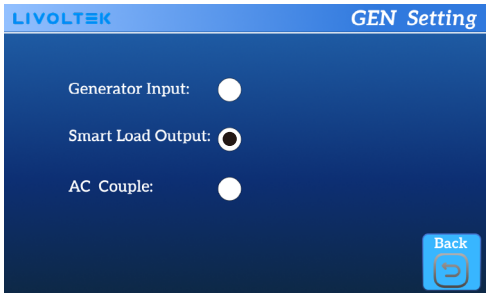

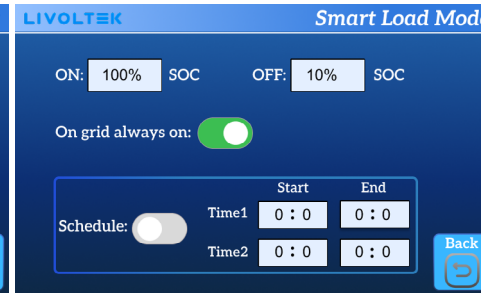

Table 9-22 On or off conditions of smart loads

On grid always on	Grid input	Schedule	ON/ OFF SOC	Status of Smart Loads
Enabled	Yes	/	/	Turn on
	No	Enabled but out of time periods	/	Turn off
		Enabled and within time periods	actual battery SoC ≥ ON value	Turn on
			actual battery SoC < OFF value	Turn off
		Disabled	actual battery SoC ≥ ON value	Turn on
			actual battery SoC < OFF value	Turn off
Disabled	/	Enabled but out of time periods	/	Turn off
	/	Enabled and within time periods	actual battery SoC ≥ ON value	Turn on
	/		actual battery SoC < OFF value	Turn off
	/	Disabled	actual battery SoC ≥ ON value	Turn on
	/		actual battery SoC < OFF value	Turn off

9.2 APP Setting

You can login on our web (link as below) on your computer, also you can scan the QR code to download the APP on your phone.

Area	Web link
Asia, Latin American, Australia and others	https://www.livoltek-portal.com/
Europe, Middle East Regions, Africa	https://evs.livoltek-portal.com/

APP:
Search for My Livoltek on Apple App Store, Google Play.

Mobile Explorer

Google Play

Download on the App Store

NOTE

- For the initial power-on of an inverter, installers should set the work mode, the country, the grid code and etc. as needed.
- You **must** scan QR code to obtain an APP setting guide for end-users in accordance with the logger connected. Follow the guide to complete account registration, site creation, device (inverter) addition **on the installation site** so that you can perform/ modify settings in your account remotely.

10 Troubleshooting and Maintenance

10.1 Troubleshooting

Once the inverter fails, the fault information is displayed on the APP interface.

The fault codes and troubleshooting methods of this series inverter are detailed in the table below. When a fault occurs, you can check the fault information according to the fault code on the mobile APP.

NOTE

- The troubleshooting list shall be updated without any notice. Please contact Livoltek after-sales team for solutions to new faults.
- In the event of a fault condition while grid power is energized, the inverter will supply power to EPS loads via a bypass path.

⚠ *QUALIFIED PERSON*

Table 10-1 Troubleshooting List

Fault Code	Fault/ Alarm Name	Possible Cause	Solutions
1, 2, 13	Grid Overvoltage	Grid voltage is higher than the set voltage protection value; Or the high voltage duration exceeds the set value for high voltage ride-through.	Generally, the inverter will be reconnected to the grid after the grid returns to normal. If the fault occurs repeatedly: ***1*** Measure the actual grid voltage, and contact the local electric power company for solutions if the grid voltage is higher than the set value. ***2*** Check whether the protection parameters are appropriately set via the App. Modify the overvoltage protection values with the consent of the local electric power operator. ***3*** Contact Livoltek after-sales team if the preceding causes are ruled out and the fault persists.
3	Grid Undervolt	Grid voltage lower than the set voltage protection value.	Generally, the inverter will be reconnected to the grid after the grid returns to normal. If the fault occurs repeatedly: ***1*** Measure the actual grid voltage, and contact the local electric power company for solutions if the grid voltage is lower than the set value. ***2*** Check whether the protection parameters are appropriately set via the App. ***3*** Check whether the AC cable is firmly in place. ***4*** Contact Livoltek after-sales team if the preceding causes are ruled out and the fault persists.

Fault Code	Fault/ Alarm Name	Possible Cause	Solutions
7	Grid Over-frequency	Grid frequency is higher than the set protection value	Generally, the inverter will be reconnected to the grid after the grid returns to normal. If the fault occurs repeatedly: ***1*** Measure the actual grid frequency, and contact the local electric power company for solutions if the grid frequency is beyond the set range. ***2*** Check whether the protection parameters are appropriately set via the App. ***3*** Contact Livoltek after-sales team if the preceding causes are ruled out and the fault persists.
8	Grid Under-frequency	Grid frequency is lower than the set protection value	Generally, the inverter will be reconnected to the grid after the grid returns to normal. If the fault occurs repeatedly: ***1*** Measure the actual grid frequency, and contact the local electric power company for solutions if the grid frequency is beyond the set range. ***2*** Check whether the protection parameters are appropriately set via the App. ***3*** Contact Livoltek after-sales team if the preceding causes are ruled out and the fault persists.
9	Grid Power Loss	***1*** There is a grid outage; ***2*** Grid cables are not firmly or correctly connected or circuit breakers are disconnected.	Generally, the inverter will be reconnected to the grid after the grid returns to normal. If the fault occurs repeatedly: ***1*** Check whether the grid supplies power reliably. ***2*** Check whether the AC cable is firmly in place. ***3*** Check whether the AC cable is connected to the correct terminal (whether the live wire and the N wire are correctly in place). ***4*** Check whether the AC circuit breaker is connected. ***5*** Contact Livoltek after-sales team if the preceding causes are ruled out and the fault persists
10, 17, 22, 33, 34, 35, 36, 49, 51, 56, 71, 74, 77, 80, 81, 89, 97, 99, 102, 105, 109, 129, 130, 131, 132	System Failure	***1*** System internal module abnormality ***2*** System-related wiring or terminal abnormality	Wait for the system to return to normal. Disconnect the AC and DC circuit breakers, and if there is a battery, disconnect the battery side switch as well. Wait for 15 minutes, then sequentially close the AC and DC circuit breakers to restart the system. Contact Livoltek after-sales team if the preceding causes are ruled out and the fault persists.

Fault Code	Fault/ Alarm Name	Possible Cause	Solutions
11	Leakage Current Exceeds Standard	Inverter operation leakage current exceeds the standard requirement.	1 The inverter can continue to operate. 2 Check for any abnormalities in the wiring and terminals related to the alarm, inspect for environmental foreign objects or other anomalies, and carry out corresponding repairs. 3 Contact Livoltek after-sales team if the preceding causes are ruled out and the fault persists.
12	Grid Abnomal	Inverter grid-tied pre-self-check triggers if grid abnormalities are detected.	Generally, the inverter will be reconnected to the grid after the grid returns to normal. If the fault occurs repeatedly: 1 Measure the actual grid, and contact the local electric power company for solutions if the grid parameter exceeds the set range. 2 Contact Livoltek after-sales team if the preceding causes are ruled out and the fault persists.
23	PE Abnormal	1 Inverter PE cable is in poor contact. 2 Inverter PE cable connection is abnormal.	1 Check if the grounding cable is connected properly. 2 Check if the insulation between the grounding cable and the live cable is normal. 3 Contact Livoltek after-sales team if the preceding causes are ruled out and the fault persists.
42, 43, 57, 449, 450, 451, 452, 453, 454, 455	PV Reverse Connection	Incorrect polarity of string connection: positive and negative terminals are reversely connected.	1 Check if the positive and negative PV ports on the inverter are reversely connected. If so, wait until the PV string current drops below 0.5A, then disconnect the DC circuit breaker and adjust the corresponding PV polarity. 2 Contact Livoltek after-sales team if the preceding causes are ruled out and the fault persists.
98	Environmental Temp Too High	1 Over high temperature inside the enclosure 2 Excessive operating environmental temperature	1 The inverter can continue to operate. 2 Check for any abnormalities in the wiring and terminals related to the alarm, inspect for environmental foreign objects or other anomalies, and carry out corresponding repairs. 3 Contact Livoltek after-sales team if the preceding causes are ruled out and the fault persists.

Fault Code	Fault/ Alarm Name	Possible Cause	Solutions
100	System Insulation Resistance Low	Photovoltaic panel insulation resistance to the ground is below the standard value.	1 Check through the APP or WEB if the ISO impedance protection value is too high, ensuring it complies with local regulations. 2 Inspect the PV and DC cable ground impedance. If there is any short circuit or damage to the cable insulation, take corrective measures. 3 If the cables are normal and the fault occurs on rainy days, wait for better weather before reconfirming. 4 Contact Livoltek after-sales team if the preceding causes are ruled out and the fault persists.
104	Environmental Temp Too Low	Detected that environmental temperature is below the protection value.	1 The inverter can continue to operate. 2 Check for any abnormalities in the wiring and terminals related to the alarm, inspect for environmental foreign objects or other anomalies, and carry out corresponding repairs. 3 Contact Livoltek after-sales team if the preceding causes are ruled out and the fault persists.
104	Environmental Temp Too Low	Detected that environmental temperature is below the protection value.	1 The inverter can continue to operate. 2 Check for any abnormalities in the wiring and terminals related to the alarm, inspect for environmental foreign objects or other anomalies, and carry out corresponding repairs. 3 Contact Livoltek after-sales team if the preceding causes are ruled out and the fault persists.
161, 163, 180, 181, 182, 183	System Alarm	1 System internal module abnormality 2 System-related wiring or terminal abnormality	1 The inverter can continue to operate. 2 Check for any abnormalities in the wiring and terminals related to the alarm, inspect for environmental foreign objects or other anomalies, and carry out corresponding repairs. 3 Contact Livoltek after-sales team if the preceding causes are ruled out and the fault persists.

Fault Code	Fault/ Alarm Name	Possible Cause	Solutions
516	AFCI Fault	Inverter experiences an AFCI fault on the DC side.	1 Disconnect the DC power and check the DC side for any cable damage, loose or poorly contacted connection terminals or fuses, or signs of burning on components. If any are found, replace the damaged cables, tighten loose terminals or fuses, and replace any components with burn marks. 2 After completing the inspection and remedial repairs of the DC side in step 1, reconnect the DC power, clear the AFCI fault through the APP or WEB, and the inverter will resume normal operation.Check whether battery communication cable is correctly and firmly connected with the terminal. 3 Contact Livoltek after-sales team if the preceding causes are ruled out and the fault persists.
645-551	Battery Alarm	An alarm is issued due to minor anomalies in the battery itself, its operating environment, or operations performed on the battery.	Generally, the battery can automatically return to normal. If the alarm persists repeatedly. 1 If an overtemperature or low temperature alarm occurs, which are alarms related to environmental temperature, take measures such as improving cooling conditions to reduce the temperature. 2 If the alarm persists and is not due to the above reasons, please contact the battery manufacturer.
577-587	Battery Fault	A fault is reported due to abnormalities in the battery itself, its operating environment, or operations performed on the battery.	1 For battery voltage faults, please check if there are any abnormalities in the connection of the battery power cables (reverse connections, looseness, etc.). If so, properly reconnect the battery power cable. 2 Once the battery power cables are confirmed to be correctly connected, check if there is any anomaly in the real-time voltage of the battery. If there is, contact the battery manufacturer. If not, please contact Livoltek Customer Service Center. 3 For battery temperature faults, take measures such as improving cooling conditions to lower the temperature. 4 If the fault still persists and is not due to the above reasons, please contact the battery manufacturer.

NOTE

- Contact the dealer if the measures listed in the troubleshooting columns have been taken but the problem persists. Contact your dealer or Livoltek after-sales team for support.

10.2 Routine Maintenance

⚠ *QUALIFIED PERSON*

10.2.1 Safety Precautions

DANGER

- High voltage generated by the equipment during operation may cause an electric shock, which could result in death, serious injury, or serious property damage. Prior to maintenance, power off the equipment and strictly comply with the safety precautions in this document and relevant documents.
- Maintain the equipment with sufficient knowledge of this document and using proper tools and testing equipment.
- Before maintaining the equipment, power it off and follow the instructions on the delayed discharge label to ensure that the equipment is powered off.
- Turn off the AC and DC circuit breakers of the inverter when maintaining the electric equipment or power distribution equipment connected the inverter.
- For personal safety maintenance personnel must wear appropriate personal protective equipment (like insulation gloves and protective shoes) for the inverter maintenance.
- Place temporary warning signs or erect fences to prevent unauthorized access to the maintenance site.
- Follow the procedures of maintenance stipulated in the manual strictly.
- Check the relevant safety and performance of the inverter rectify any faults that may compromise the inverter security performance before restarting the inverter.
- To avoid any other unforeseeable risk, contact immediately your dealer, if there is any issue found during operation.
- The equipment can be powered on only after all faults are rectified. Failing to do so may escalate faults or damage the equipment.

WARNING

- Before maintaining and commissioning inverter and its peripheral distribution unit switch off all the charged terminals of the inverter, and wait at least 5 minutes after the inverter is powered off.

CAUTION

- Risk of inverter damage or personal injury due to incorrect service!
- Always keep in mind that the inverter is powered by dual sources: PV strings and utility grid.
- Before maintaining and commissioning inverter and its peripheral distribution unit switch off all the charged terminals of the inverter, and wait at least 5 minutes after the inverter is powered off.

10.2.2 Shutdown the Inverter

Step 1: Press the System on/ off key on the inverter display to turn off the inverter.

Step 2: Turn off the circuit breaker between the inverter and EPS loads/ smart loads (if connected) and between the inverter.

Step 3: Turn off the circuit breaker between the inverter and PV panels on the inverter.

Step 4: Turn off the circuit breaker between the inverter and the battery, press the button on the battery to turn it off.

Step 5: Turn off the circuit breaker between the inverter and the grid. Turn off the circuit breaker between the inverter and the generator (if connected).

Step 6: Wait at least 5 minutes after the inverter display and indicators black out for discharging energy from the interrnal circuits of the inverter.

10.2.3 Equipment Maintenance

Table 10-2 Routine maintenance

Check Item	Method	Period
Device clean	• Check whether the air outlet and heat sink are blocked by dust and other objects. • Check if the air inlet and outlet are normal. Clean the air inlet and outlet, if necessary.	Six months to a year (depend on the dust contents in air)
System running status	• Check whether the inverter is not damaged or deformed or can be operated with no abnormal sound.	Once every 6 to 12 months
Fans	• Check whether there is a fan alarm on the APP. • Check whether there is any abnormal noise when the fan is rotating. • Clean or replace the fans and contact our dealer for support.	Once every 6 to 12 months
Cable entry	• Check whether the cable entry is insufficiently sealed, or the gap is excessively large, and reseal the entry when necessary.	Once every 6 to 12 months
Electrical connection	• Check whether all cables are firmly in place. • Check whether a cable is damaged, especially the part contacting the metal enclosure.	Once every 6 to 12 months

11 Decommissioning

11.1 Disassembling the Device

⚠ QUALIFIED PERSON

11.1.1 Shut Down the Inverter

CAUTION

Danger of burns!

- Even if the inverter is turned off, it may still be hot and cause burns. Wear protective gloves before operating the inverter after it cools down.

For dismantling the inverter, the inverter must be switched off. Proceed as follows to disconnect the inverter. Lethal voltages or damage to the inverter will follow if otherwise.

Step 1: Refer to *10.2.2 Shutdown the Inverter* to power off the inverter or inverters in parallel.

Step 2: Ensure that the DC cable is free from voltage and current with measuring equipment.

11.1.2 Dismantling the inverter

CAUTION

- Risk of burns and electric shock!
- After the inverter is turned off for 5 minutes, measure the voltage and current with professional instrument. Only when there is no voltage nor current can operators who wear protective equipment operate and maintain the inverter.

NOTE

- Before dismantling the inverter, disconnect the inverter from both AC and DC power.

Step 1: Please refer to 7 *Elelctrical Connection* to disconnect all cables from the inverter.

Step 2: Refer to *6 Mechanical Installation* to disassemble the inverter from the wall.

Step 3: If necessary, remove the inverter bracket from the wall.

Step 4: If you will reuse the inverter, refer to *3 Transportion and Storage* to restore it.

11.2 Packing

⚠ *QUALIFIED PERSON*

If the original package materials are kept, put the inverter inside the original package. If the original packages are not available, put the inverter inside a cardboard box suitable for the weight and size of the inverter and seal it properly.

11.3 Disposing of the Device

The product must be disposed of in accordance with the locally applicable disposal regulations for waste electrical and electronic equipment.

CAUTION

- Some components of the inverter may cause environmental pollution. Please dispose of them in accordance with the disposal regulations for electronic waste applicable at the installation site.
- Do NOT dispose of it with household waste.

12 Technical Specifications

NOTE

- Backup output power depends on the battery.
- Specifications are subject to change without further notice.

- DC Input Data

Model	GF1-3K6S2	GF1-6KS2
Max. PV input power (W)	7200	12000
Max. PV input voltage (V)	500	
Minimum PV input voltage(V)	60	
Start-up voltage (V)	70	
Nominal PV input voltage (V)	370	
MPPT voltage range (V)	60 to 500	
No. of MPPTs	2	
Strings per MPPT	1/1	
Max. input current per MPPT (A)	18/18	
Max. short circuit current per MPPT (A)	22/22	

- AC (Grid) Input Data

Model	GF1-3K6S2	GF1-6KS2
Max. AC input power (W)	9200	
Nominal grid voltage (V)	L/N/PE, 220/230/240	
Nominal grid voltage range (V)	0.85 to 1.1Un	
Nominal grid frequency (Hz)	50/60	
Nominal grid frequency range (Hz)	45 to 55/ 55 to 65	
Max. input current (A)	40	
Power factor	> 0.99 at rated power (adjustable 0.8 leading to -0.8 lagging)	
Total harmonic distortion rate (%)	<3	

- EPS (Off-grid) Output Data

Model	GF1-3K6S2	GF1-6KS2
Nominal output apparent power (VA)	4048	7500
Nominal output power (W)	3680	6000
Peak output/ apparent power (W/ VA)	2 times of rated power, 10s	
Nominal output voltage (V)	L/N/PE, 220/230/240	
Nominal output frequency (Hz)	50/60	
Nominal output current (A)	16.7	27.3
Total harmonic distortion rate (%)	<3	

- Battery Data

Model	GF1-3K6S2	GF1-6KS2
Battery type	Li-ion	
Battery voltage range (V)	40 to 60	
Max. charge/ discharge current (A)	125	
Communication with BMS	CAN/RS485	
Charge/ discharge strategy for li-ion battery	Self-adaption to BMS	

- Generator Data

Model	GF1-3K6S2	GF1-6KS2
Max. input power (W)	3680	6000
Max. input current (A)	16.7	27.3
Nominal input frequency (Hz)	50/60	

- Efficiency

Model	GF1-3K6S2	GF1-6KS2
Max. Efficiency (%)	97.6	
Euro Efficiency (%)	96.8	
MPPT Efficiency (%)	> 99.9	

- General Data

Model	GF1-3K6S2	GF1-6KS2
Dimensions (W*H*D mm)	480 * 342 * 190	
Weight (kg)	15	
Mounting method	Wall-mounted	
Ingress protection	IP66	
Cooling	Natural cooling	
Operating temperature range (℃)	-25 to +60	
Permissible ambient humidity (%)	0 to 95	
Max. altitude (m)	2000	
Noise (dB)	35	
Display	LCD+APP	
Topology (solar to battery)	High-frequency isolation	
Warranty	Five-year (10-year optional)	

Contact Information

Netherlands
- Gruttostraat 9, 5212 VM, 'S-Hertogenbosch, Netherlands
- +31 (0) 657238010
- service@livoltek.com

Poland
- Nowa 10, 05-500 Stara Iwiczna, Poland
- +48 889 822 930
- service.pl@livoltek.com

Italy
- Via Cavazzana 5, 35123, Padova, Italia
- +39 800 778 332
  VIP: +39 351 677 3990, +39 392 751 6147
- service.it@livoltek.com

Brazil
- Av. Guaruba, 585–Distrito Industrial I, Manaus–AM, 69075-080, Brazil
- +55 11 93338-1338
- suporte@livoltek.com.br

Kenya *(East Africa)*
- Sunflag Industrial Park, next to Hilton Garden Inn, Mombasa Road, Nairobi, Kenya.
- +254 783 884568
- service.ea@livoltek.com

Nigeria *(West Africa)*
- 9 Baderinwa Alabi Street, Lekki, Lagos
- service.ng@livoltek.com

Colombia
- Cl. 99#10-08 Piso 7Bogotá, Colombia
- +57 311 5508402
- service.co@livoltek.com

Vietnam
- 7 Tân Chánh Hiệp 36, Tân Chánh Hiệp, Quận 12, Hồ Chí Minh 70000, Vietnam.

United Kingdom
- 55 Holloway Head, Birmingham B1 1HP, UK
- +44 7300 839410
- service.uk@livoltek.com

Spain *(Iberia)*
- Aeronáutica 6, 28923 Alcorcón (Madrid)
- +34 671 151 095
- service.es@livoltek.com

Romania
- DJ691, km 8+775 m, Dreapta, Giarmata City, Timis County, Romania
- +40742 066 006
- service.romania@livoltek.com

Pakistan
- Plot Number 13B&14B , 109/M Quaid e Azam Industrial Estate Lahore.
- +92 370 8435519
- service.pk@livoltek.com

South Africa
- 82 Roan Crescent, Corporate Park North, Midrand, Johannesburg, South Africa
- +27 79 480 7038
  +27 79 148 8105
- saservice@livoltek.com

Senegal *(Northwest Africa)*
- 11 rue Vincens x avenue Faidherbe, 5e étage, Dakar, sénégal
- service.sn@livoltek.com

Egypt
- New Cairo, Cairo, Egypt
- service.egypt@livoltek.com

Dominican Republic
- Calle Ángel Severo Cabral #19A, Sector Julieta Morales, DISTRITO NACIONAL
- +18097996550
- service.dr@livoltek.com

Warranty Card Registration

Dear customer, thank you for choosing LIVOLTEK product.

For registering product warranty, please prepare everything ready and register on

https://www.livoltek.com/warranty-center/

Product Information	
Product Type	
Product SN	
Installation date	
Installation Company	
Personal Information	
Your name	
Your contact number	
Your Email address	
Your home address	

* Warranties should be registered in time. It is recommended that they are registered no more than 6 weeks following the successful installation and commissioning of the product where possible, thanks for your cooperation.



LIVOLTEK

Power Your Life with Green Energy

www.livoltek.com info@livoltek.com
1418-35, Moganshan Road, Hangzhou, 310011, China